The City of

DAYTONA BEACH

UTILITIES DEPARTMENT
STANDARD DETAILS

2016

THE CITY OF DAYTONA BEACH
UTILITIES DEPARTMENT
125 BASIN ST., STE. 130
DAYTONA BEACH, FL 32114

RECLAIMED WATER

SANITARY SEWER

POTABLE WATER

STORMWATER

TABLE OF CONTENTS

DISCLAIMER

REVISED APRIL 2016

THE CITY OF DAYTONA BEACH

UTILITIES DEPARTMENT
STANDARD DETAILS

We are furnishing the information transmitted herewith under the following understanding: In accepting and utilizing the accompanying data, the recipient, his employer, and any other person or entity who comes into possession of such drawings or data; agree to waive all claims against the City of Daytona Beach (hereafter called the City) resulting in any way from changes or reuse of such drawings and data, agree to the fullest extent permitted by law, to indemnify and hold harmless the City from any damage, liability or cost, including reasonable attorneys' fees and costs and expenses of defense, arising from any use of the data, acknowledge and agree that the City reserves the right to revise such drawings and data without notice, acknowledge that the City makes no warranties either express or implied, of fitness for any particular purpose including any warranty as to readability or compatibility with your hardware or software or against deterioration, acknowledge and agree that, while the City makes an effort to ensure its data is virus-free, the City shall not be held liable for any harm resulting from the installation or utilization of the data, and agree to use best efforts to verify the data to ascertain the accuracy and completeness of the data.

BACK

THE CITY OF DAYTONA BEACH
WATER UTILITIES DEPARTMENT
125 BASIN ST., STE. 100
DAYTONA BEACH, FL 32114

TABLE OF CONTENTS
UTILITIES DEPARTMENT STANDARD DETAILS

POTABLE WATER DETAILS

PAGE NO.		
5	W-1	WATER CONSTRUCTION NOTES (PAGE 1 OF 4)
6	W-2	WATER CONSTRUCTION NOTES (PAGE 2 OF 4)
7	W-3	WATER CONSTRUCTION NOTES (PAGE 3 OF 4)
8	W-4	WATER CONSTRUCTION NOTES (PAGE 4 OF 4)
9	W-5	GUIDELINES FOR ACCEPTANCE OF NEW WATER MAINS
10	W-6	DAILY WATER FLOWS FOR VARIOUS OCCUPANCIES
11	W-7	PIPE SEPARATION DETAIL
12	W-8	TYPICAL PIPE CROSSING DETAIL
13	W-9	WATER MAIN SEPARATION CHART
14	W-10	DIP RESTRAINED JOINT TABLE
15	W-11	UTILITY PIPE CONCRETE ENCASEMENT DETAIL
16	W-12	TYPICAL RAILROAD CROSSING
17	W-13	WATERMAIN INSTALLATION BETWEEN STORM INLET AND R.O.W.
18	W-14	TYPICAL BORE AND JACK DETAIL
19	W-15	PAVEMENT CUT AND PATCH
20	W-16	WATER VALVE AND VALVE BOX
21	W-17	MAIN VALVE BOX DETAIL
22	W-18	FIRE HYDRANT ASSEMBLY
23	W-19	FIRE/DOMESTIC/IRRIGATION CONNECTION
24	W-20	WATER SERVICE CONNECTION (PAGE 1 OF 2)
25	W-21	WATER SERVICE CONNECTION UNDER ROAD (PAGE 2 OF 2)
26	W-22	TEMPORARY FILL CONNECTION DETAIL
27	W-23	MASTER WATER METER ASSEMBLY W/BYPASS
28	W-24	MANUAL AIR RELEASE VALVE
29	W-25	AUTOMATIC ARV/VACUUM VALVE
30	W-26	RPBP, SINGLE SERVICE 3/4", 1", 1 1/2", OR 2" (PAGE 1 OF 3)
31	W-27	RPBP, SINGLE SERVICE 3" OR 4" (PAGE 2 OF 3)
32	W-28	RPBP, SINGLE SERVICE 6" OR 8" (PAGE 3 OF 3)
33	W-29	DOUBLE CHECK VALVE ASSEMBLY BACKFLOW PREVENTER
34	W-30	2" BLOW-OFF VALVE ASSEMBLY
35	W-31	PIG LAUNCH AND RECEIVING
36	W-32	POTABLE WATER ACCEPTABLE PRODUCTS (PAGE 1 OF 8)
37	W-33	POTABLE WATER ACCEPTABLE PRODUCTS (PAGE 2 OF 8)
38	W-34	POTABLE WATER ACCEPTABLE PRODUCTS (PAGE 3 OF 8)
39	W-35	POTABLE WATER ACCEPTABLE PRODUCTS (PAGE 4 OF 8)
40	W-36	POTABLE WATER ACCEPTABLE PRODUCTS (PAGE 5 OF 8)
41	W-37	POTABLE WATER ACCEPTABLE PRODUCTS (PAGE 6 OF 8)
42	W-38	POTABLE WATER ACCEPTABLE PRODUCTS (PAGE 7 OF 8)
43	W-39	POTABLE WATER ACCEPTABLE PRODUCTS (PAGE 8 OF 8)

RECLAIMED WATER DETAILS

PAGE NO.		
45	RW-1	DESIGN & CONSTRUCTION NOTES (PAGE 1 OF 3)
46	RW-2	DESIGN & CONSTRUCTION NOTES (PAGE 2 OF 3)
47	RW-3	DESIGN & CONSTRUCTION NOTES (PAGE 3 OF 3)
48	RW-4	PIPE SEPARATION DETAIL
49	RW-5	WATER MAIN SEPARATION CHART
50	RW-6	PVC & DIP RESTRAINED JOINT TABLE
51	RW-7	UTILITY PIPE CONCRETE ENCASEMENT
52	RW-8	RAILROAD CROSSING
53	RW-9	IRRIGATION (SPRINKLER) SERVICE CONNECTION (PAGE 1 OF 2)
54	RW-10	IRRIGATION SERVICE UNDER ROAD (PAGE 2 OF 2)
55	RW-11	PAVEMENT CUT AND PATCH
56	RW-12	VALVE AND VALVE BOX
57	RW-13	MAIN VALVE BOX
58	RW-14	CARSON PLASTIC VALVE BOX
59	RW-15	PIG LAUNCH & RECEIVING DETAIL
60	RW-16	RECLAIMED WATER 'IN USE' SIGN
61	RW-17	RECLAIMED WATER APPROVED PRODUCTS
62	RW-18	RECLAIMED WATER APPROVED PRODUCTS
63	RW-19	RECLAIMED WATER APPROVED PRODUCTS
64	RW-20	RECLAIMED WATER APPROVED PRODUCTS
65	RW-21	RECLAIMED WATER APPROVED PRODUCTS
66	RW-22	RECLAIMED WATER APPROVED PRODUCTS

NEXT

TABLE OF CONTENTS
UTILITIES DEPARTMENT STANDARD DETAILS

SANITARY SEWER DETAILS

PAGE NO.		
68	S-1	SANITARY SEWER NOTES (PAGE 1 OF 4)
69	S-2	SANITARY SEWER NOTES (PAGE 2 OF 4)
70	S-3	SANITARY SEWER NOTES (PAGE 3 OF 4)
71	S-4	SANITARY SEWER NOTES (PAGE 4 OF 4)
72	S-5	WASTE WATER DAILY FLOWS
73	S-6	PIPE SEPARATION DETAIL
74	S-7	SANITARY SEWER CONCRETE ENCASEMENT
75	S-8	TYPICAL RAILROAD CROSSING
76	S-9	PAVEMENT CUT AND PATCH DETAIL
77	S-10	RESIDENTIAL SANITARY LATERAL
78	S-11A	COMMERCIAL SANITARY LATERAL
79	S-11B	COMMERCIAL SANITARY LATERAL
80	S-12	SANITARY LATERAL CLEANOUT
81	S-13	SANITARY SEWER MANHOLE & GENERAL NOTES
82	S-14	OUTSIDE DROP SANITARY MANHOLE (STANDARD)
83	S-15	OUTSIDE DROP SANITARY MANHOLE (RETROFIT)
84	S-16	SANITARY MANHOLE INVERT
85	S-17	RUBBER BOOT AND PRECAST JOINT CONNECTION
86	S-18	SANITARY SEWER COVER
87	S-19	SANITARY VALVE AND VALVE BOX
88	S-20	AUTOMATIC ARV/VACUUM VALVE DETAIL
89	S-21	MANUAL AIR RELEASE VALVE
90	S-22	PIG LAUNCH & RECEIVING DETAIL
91	S-23	LIFT STATION STANDARD DETAIL (SHEET 1 OF 7) WETWELL MOUNTED SANITARY OR COMBINED SEWER
92	S-23	LIFT STATION STANDARD DETAIL (SHEET 2 OF 7) WETWELL MOUNTED SANITARY OR COMBINED SEWER
93	S-23	LIFT STATION CONTROL & RTU DIAGRAMS (SHEET 3 OF 7) WETWELL MOUNTED SANITARY OR COMBINED SEWER
94	S-23	LIFT STATION CONTROL & RTU W/SP312E DIAGRAMS (SHEET 4 OF 7) WETWELL MOUNTED SANITARY OR COMBINED SEWER
95	S-23	LIFT STATION CONTROL & RTU W/SP312E DIAGRAMS (SHEET 5 OF 7) WETWELL MOUNTED SANITARY OR COMBINED SEWER
96	S-23	LIFT STATION CONTROL & RTU W/SP312E DIAGRAMS (SHEET 6 OF 7) WETWELL MOUNTED SANITARY OR COMBINED SEWER
97	S-23	LIFT STATION CONTROL & RTU DIAGRAMS (SHEET 7 OF 7) WETWELL MOUNTED SANITARY OR COMBINED SEWER
98	S-24	LIFT STATION GENERATOR SPECS & DETAILS (SHEET 1 OF 8) SUBMERSIBLE SANITARY OR COMBINED SEWER
99	S-24	LIFT STATION STANDARD DETAIL (SHEET 2 OF 8) SUBMERSIBLE SANITARY OR COMBINED SEWER
100	S-24	LIFT STATION STANDARD DETAIL (SHEET 3 OF 8) SUBMERSIBLE SANITARY OR COMBINED SEWER
101	S-24	LIFT STATION CONTROL & RTU W/SP312E DIAGRAMS (SHEET 4 OF 8) SUBMERSIBLE SANITARY OR COMBINED SEWER
102	S-24	LIFT STATION CONTROL & RTU W/SP312E DIAGRAMS (SHEET 5 OF 8) SUBMERSIBLE SANITARY OR COMBINED SEWER
103	S-24	LIFT STATION CONTROL & RTU W/SP312E DIAGRAMS (SHEET 6 OF 8) SUBMERSIBLE SANITARY OR COMBINED SEWER
104	S-24	LIFT STATION CONTROL AND RTU DIAGRAMS (SHEET 7 OF 8) SUBMERSIBLE SANITARY OR COMBINED SEWER
105	S-24	LIFT STATION CONTROL AND RTU STANDARDS (SHEET 8 OF 8) SUBMERSIBLE SANITARY OR COMBINED SEWER
106	S-25	LIFT STATION GENERATOR SYSTEM SPECS & DETAILS (SHEET 1 OF 7) WETWELL MOUNTED RESIDENTIAL WASTEWATER
107	S-25	LIFT STATION STANDARD DETAIL (SHEET 2 OF 7) WETWELL MOUNTED RESIDENTIAL WASTEWATER
108	S-25	LIFT STATION CONTROL & RTU DIAGRAMS (SHEET 3 OF 7) WETWELL MOUNTED RESIDENTIAL WASTEWATER

NEXT PREV

TABLE OF CONTENTS
UTILITIES DEPARTMENT STANDARD DETAILS

SANITARY SEWER DETAILS

PAGE NO.		
109	S-25	LIFT STATION CONTROL & RTU W/SP312E DIAGRAMS (SHEET 4 OF 7) WETWELL MOUNTED RESIDENTIAL WASTEWATER
110	S-25	LIFT STATION CONTROL & RTU W/SP312E DIAGRAMS (SHEET 5 OF 7) WETWELL MOUNTED RESIDENTIAL WASTEWATER
111	S-25	LIFT STATION CONTROL & RTU W/SP312E DIAGRAMS (SHEET 6 OF 7) WETWELL MOUNTED RESIDENTIAL WASTEWATER
112	S-25	LIFT STATION CONTROL & RTU DIAGRAMS (SHEET 7 OF 7) WETWELL MOUNTED RESIDENTIAL WASTEWATER
113	S-26	LIFT STATION GENERATOR SPECS & DETAILS (SHEET 1 OF 8) SUBMERSIBLE RESIDENTIAL SEWER
114	S-26	LIFT STATION STANDARD DETAIL (SHEET 2 OF 8) SUBMERSIBLE RESIDENTIAL SEWER
115	S-26	LIFT STATION STANDARD DETAIL (SHEET 3 OF 8) SUBMERSIBLE RESIDENTIAL SEWER
116	S-26	LIFT STATION CONTROL & RTU W/SP312E DIAGRAMS (SHEET 4 OF 8) SUBMERSIBLE RESIDENTIAL SEWER
117	S-26	LIFT STATION CONTROL & RTU W/SP312E DIAGRAMS (SHEET 5 OF 8) SUBMERSIBLE RESIDENTIAL SEWER
118	S-26	LIFT STATION CONTROL & RTU W/SP312E DIAGRAMS (SHEET 6 OF 8) SUBMERSIBLE RESIDENTIAL SEWER
119	S-26	LIFT STATION CONTROL & RTU DIAGRAMS (SHEET 7 OF 8) SUBMERSIBLE RESIDENTIAL SEWER
120	S-26	LIFT STATION CONTROL & RTU STANDARDS (SHEET 8 OF 8) SUBMERSIBLE RESIDENTIAL SEWER
121	S-27	SANITARY SEWER ACCEPTABLE PRODUCTS (PAGE 1 OF 6)
122	S-28	SANITARY SEWER ACCEPTABLE PRODUCTS (PAGE 2 OF 6)
123	S-29	SANITARY SEWER ACCEPTABLE PRODUCTS (PAGE 3 OF 6)
124	S-30	SANITARY SEWER ACCEPTABLE PRODUCTS (PAGE 4 OF 6)
125	S-31	SANITARY SEWER ACCEPTABLE PRODUCTS (PAGE 5 OF 6)
126	S-32	SANITARY SEWER ACCEPTABLE PRODUCTS (PAGE 6 OF 6)

STORMWATER DETAILS

PAGE NO.		
128	ST-1	STORM DRAINAGE CONSTRUCTION NOTES
129	ST-2	STORM DRAINAGE CONSTRUCTION NOTES
130	ST-3	STORM DRAINAGE CONSTRUCTION NOTES
131	ST-4	STORM DRAINAGE CONSTRUCTION NOTES
132	ST-5	EROSION AND SEDIMENT CONTROL NOTES
133	ST-6	FORCE MAIN TESTING REQUIREMENTS
134	ST-7	UTILITY PIPE CONCRETE ENCASEMENT
135	ST-8	RAILROAD CROSSING
136	ST-9	STAKED SILT FENCE
137	ST-10	FLOATING TURBIDITY BARRIER
138	ST-11	EXFILTRATION TRENCH
139	ST-12	FRENCH DRAIN SYSTEM & NOTES (PAGE 1 OF 2)
140	ST-13	FRENCH DRAIN SYSTEM & NOTES (PAGE 2 OF 2)
141	ST-14	PAVEMENT CUT AND PATCH
142	ST-15	STORMWATER MANHOLE
143	ST-16	STORM-SEWER COVER DETAIL & MH GENERAL NOTES
144	ST-17	CONCRETE STORM INLET & APRON
145	ST-18	UNDER CURB/GUTTER CATCH BASIN
146	ST-19	CONCRETE SPILLWAY
147	ST-20	MITERED END SECTION (SINGLE PIPE)
148	ST-21	DRY POND - CROSS SECTION
149	ST-22	WET POND - CROSS SECTION

AS-BUILT DRAWING REQUIREMENTS

PAGE NO.	
150	PAGE 1 OF 7
151	PAGE 2 OF 7
152	PAGE 3 OF 7
153	PAGE 4 OF 7
154	PAGE 5 OF 7
155	PAGE 6 OF 7
156	PAGE 7 OF 7

PREV

POTABLE WATER DETAILS

TABLE OF CONTENTS

PAGE NO.		
5	W-1	WATER CONSTRUCTION NOTES (PAGE 1 OF 4)
6	W-2	WATER CONSTRUCTION NOTES (PAGE 2 OF 4)
7	W-3	WATER CONSTRUCTION NOTES (PAGE 3 OF 4)
8	W-4	WATER CONSTRUCTION NOTES (PAGE 4 OF 4)
9	W-5	GUIDELINES FOR ACCEPTANCE OF NEW WATER MAINS
10	W-6	DAILY WATER FLOWS FOR VARIOUS OCCUPANCIES
11	W-7	PIPE SEPARATION DETAIL
12	W-8	TYPICAL PIPE CROSSING DETAIL
13	W-9	WATER MAIN SEPARATION CHART
14	W-10	DIP RESTRAINED JOINT TABLE
15	W-11	UTILITY PIPE CONCRETE ENCASEMENT DETAIL
16	W-12	TYPICAL RAILROAD CROSSING
17	W-13	WATERMAIN INSTALLATION BETWEEN STORM INLET AND R.O.W.
18	W-14	TYPICAL BORE AND JACK DETAIL
19	W-15	PAVEMENT CUT AND PATCH
20	W-16	WATER VALVE AND VALVE BOX
21	W-17	MAIN VALVE BOX DETAIL
22	W-18	FIRE HYDRANT ASSEMBLY
23	W-19	FIRE/DOMESTIC/IRRIGATION CONNECTION
24	W-20	WATER SERVICE CONNECTION (PAGE 1 OF 2)
25	W-21	WATER SERVICE CONNECTION UNDER ROAD (PAGE 2 OF 2)
26	W-22	TEMPORARY FILL CONNECTION DETAIL
27	W-23	MASTER WATER METER ASSEMBLY W/BYPASS
28	W-24	MANUAL AIR RELEASE VALVE
29	W-25	AUTOMATIC ARV/VACUUM VALVE
30	W-26	RPBP, SINGLE SERVICE 3/4", 1", 1 1/2", OR 2" (PAGE 1 OF 3)
31	W-27	RPBP, SINGLE SERVICE 3" OR 4" (PAGE 2 OF 3)
32	W-28	RPBP, SINGLE SERVICE 6" OR 8" (PAGE 3 OF 3)
33	W-29	DOUBLE CHECK VALVE ASSEMBLY BACKFLOW PREVENTER
34	W-30	2" BLOW-OFF VALVE ASSEMBLY
35	W-31	PIG LAUNCH AND RECEIVING
36	W-32	POTABLE WATER ACCEPTABLE PRODUCTS (PAGE 1 OF 8)
37	W-33	POTABLE WATER ACCEPTABLE PRODUCTS (PAGE 2 OF 8)
38	W-34	POTABLE WATER ACCEPTABLE PRODUCTS (PAGE 3 OF 8)
39	W-35	POTABLE WATER ACCEPTABLE PRODUCTS (PAGE 4 OF 8)
40	W-36	POTABLE WATER ACCEPTABLE PRODUCTS (PAGE 5 OF 8)
41	W-37	POTABLE WATER ACCEPTABLE PRODUCTS (PAGE 6 OF 8)
42	W-38	POTABLE WATER ACCEPTABLE PRODUCTS (PAGE 7 OF 8)
43	W-39	POTABLE WATER ACCEPTABLE PRODUCTS (PAGE 8 OF 8)

POTABLE WATER CONSTRUCTION & DESIGN STANDARDS

1. THE CITY'S UTILITIES DEPARTMENT SHALL BE GIVEN A MINIMUM OF 3 BUSINESS DAYS ADVANCE NOTICE (NOT INCLUDING HOLIDAYS OR WEEKENDS) PRIOR TO BEGINNING ANY POTABLE WATER SYSTEM CONSTRUCTION.
2. ALL DEWATERING ACTIVITIES EITHER DIRECTLY DISCHARGED OR THAT SUBSEQUENTLY USE THE CITY'S STORMWATER SYSTEM TO CONVEY GROUND OR SURFACE WATER FROM A SITE SHALL REQUIRE A STANDARD OR GENERAL USE PERMIT AS PER ARTICLE 7 SECTION 7 OF THE LAND DEVELOPMENT CODE. A PERMIT SHALL BE REQUIRED PRIOR TO ENGAGING IN ANY DEWATERING ACTIVITIES, OR IN ANY CON-STRUCTION ACTIVITIES. DEWATERING ACTIVITIES INCLUDE THE REMOVAL OF GROUND WATER FROM A CONSTRUCTION SITE, ENCLOSED VAULT, COFFERDAM, OR TRENCHES ALLOWING CONSTRUCTION OR MAIN-TENANCE TO BE DONE IN THE DRY, OR ANY ACTIVITY WHICH CHANGES THE IMPERVIOUS AREA OF LAND. SITE SPECIFIC PERMITS SHALL REQUIRE THE PAYMENT OF A PER ACRE FEE BASED ON THE SIZE OF THE DEVELOPMENT. GENERAL PURPOSE PERMITS SHALL REQUIRE THE PAYMENT OF AN ANNUAL FEE BASED ON ROUTINE SCHEDULE OF MAINTENANCE ACTIVITIES DISCHARGING DIRECTLY OR SUBSEQUENTLY INTO THE CITY'S MS4. DEWATERING PERMIT APPLICATIONS MAY BE FOUND AT http://www.codb.us/index.aspx?NID=262. FEES ARE SUBJECT TO ARTICLE 20 SECTION 3.1 OF THE LAND DEVELOPMENT CODE AND MUST BE SUBMITTED TO THE CITY OF DAYTONA BEACH UTILITY DEPARTMENT AT 125 BASIN STREET SUITE 100, DAYTONA BEACH FL 32114 BEFORE ANY USE OF THE MS4 WILL BE ALLOWED. FAILURE TO COMPLY WILL RESULT IN THE TERMINATION OF ACCESS TO THE CITY'S MS4 SYSTEM.
3. ALL WORK PERFORMED UPON POTABLE WATER FACILITIES OWNED OR PROPOSED TO BE OWNED BY THE CITY SHALL BE CONSTRUCTED BY AN UNDERGROUND UTILITY CONTRACTOR OR GENERAL CONTRACTOR LICENSED IN THE STATE OF FLORIDA AND REGISTERED WITH THE CITY.
4. UPON CONSTRUCTION COMPLETION AND ACCEPTANCE OF THE SYSTEM, IT SHALL BE THE DESIGN ENGINEER'S RESPONSIBILITY TO ENSURE THAT THE SYSTEM IS PROPERLY CERTIFIED AND ACCEPTED BY THE DEPARTMENT OF HEALTH, AND THAT AS-BUILTS DRAWINGS (MEETING THE CITY'S AS-BUILT DRAWING REQUIREMENTS) ARE PROVIDED TO THE CITY PRIOR TO ANY USE OF THIS SYSTEM.
5. WATER DISTRIBUTION SYSTEM SHALL BE DESIGNED TO COMPLY WITH THE CITY'S FIRE (WATER) FLOW CODE.
6. ALL WATER SERVICE ENDINGS SHALL BE MARKED WITH A 2" X 4" LUMBER (PRESSURE TREATED) EXTENDING 4 FEET ABOVE GRADE, INFRONT OF THE METER BOX WITH 2' OF ENDOTRACE COILED AND CAPPED WITH AN ELSTER HYDROSERT CAP INSIDE OF THE METER BOX.
7. ALL WATER SERVICES SHALL BE MARKED WITH AN "/\" SAW CUT INTO THE CURB.
8. ALL WATER VALVES SHALL BE MARKED WITH AN "X" SAW CUT INTO THE CURB.
9. ALL TAPPING OF MAINS SHALL BE PERFORMED WITH A UTILITY REPRESENTATIVE PRESENT. SCHEDULING OF THESE CONNECTIONS SHALL BE REQUIRE A MINIMUM OF 3 (THREE BUSINESS DAYS FOR NOTIFICATION AND SHALL BE COORDINATED WITH THE WATER DISTRIBUTION DIVISION (386) 671-8815.
10. FOR CONSTRUCTION PURPOSES, THE PLANS SHALL DIMENSION STATIONING & OFFSETS FROM THE CENTER LINE OF CONSTRUCTION AND RIGHT-OF-WAY LINES THE PROPOSED LOCATIONS OF ALL WATER MAINS.
11. DEWATERING SHALL BE PROVIDED TO KEEP GROUNDWATER ELEVATION A MINIMUM OF 6 INCHES BELOW MAIN BEING LAID.
12. ALL WATER MAINS SHALL BE LAID ON A FIRM UNYIELDING FOUNDATION WITH ALL UNSUITABLE MATERIAL (MUCK, ROCK, COQUINA, ETC.) REMOVED AND REPLACED WITH CLEAN GRANULAR MATERIAL.
13. TRENCHES SHALL BE BACKFILLED WITH MATERIAL ACCEPTABLE TO THE CITY WITH A MINIMUM COMPACTION OF 98% IN PAVED AREAS AND 95% IN UNPAVED AREAS IN ACCORDANCE WITH AASHTO T-180 MODIFIED PROCTOR TEST.
14. ON PROJECTS THAT ARE NOT INITIATED BY THE CITY IT SHALL BE THE CONTRACTORS RESPONSIBILITY TO ENSURE THAT TRENCH COMPACTION TESTS BE PROVIDED AT POINTS 12 INCHES ABOVE THE PIPE AND AT 12 INCH VERTICAL INTERVALS TO FINISH GRADE, AT A MINIMUM SPACING OF EVERY 300 FEET.

NEXT

RETURN TO TOC

(CONT'D)

15. WHERE POTABLE WATER AND SANITARY SEWER MAINS CROSS WITH LESS THAN TWELVE (12) INCHES OF VERTICAL CLEARANCE OR WHERE THE SEWER MAIN IS ABOVE THE WATER MAIN, THE SEWER MAIN SHALL BE ENCASED WITH CONCRETE, OR UPGRADED TO C-900 PVC PIPE FOR A MINIMUM LENGTH OF TWENTY (20) FEET, CENTERED ON THE POINT OF CROSSING. A MINIMUM HORIZONTAL SEPARATION OF SIX (6) FEET (SIDE TO SIDE) BETWEEN POTABLE WATER MAINS AND SEWER MAINS SHALL BE MAINTAINED WHEN AT ALL POSSIBLE. WHEN THE SIX (6) FOOT HORIZONTAL SEPARATION CANNOT BE MAINTAINED, THE WATER MAIN SHALL BE INSTALLED IN A SEPARATE TRENCH OR ON AN UNDISTURBED EARTH SHELF AT LEAST 18" ABOVE THE SEWAGE MAIN. ALTERNATIVELY, THE SEWER MAIN SHALL BE ENCASED WITH CONCRETE OR ENCLOSED IN A WATER TIGHT CARRIER PIPE, OR UPGRADED TO PRESSURE RATED PVC PIPE (MEETING THE AWWA C-900 OR C-905 SPECIFICATION) AND PRESSURE TESTED. **SEE PIPE SEPARATION DETAIL (W-5) AND UTILITY PIPE ENCASEMENT DETAIL (W-9).

16. WATER MAINS ARE TO BE CONSTRUCTED A MINIMUM OF FOUR FEET MEASURED FROM THE OUTSIDE WALL OF THE WATER MAIN, BEHIND THE BACK OF CURB OR OUTSIDE OF THE EDGE OF ROADWAY PAVEMENT, WHICHEVER IS GREATER.

17. A THREE INCH WIDE MATALIZED LOCATOR TAPE SHALL BE USED FOR ALL PRESURIZED MAINS INSTALLED. THE LOCATOR TAPE SHALL BE NON-CORRODIBLE CONSISTING OF POLYETHYLEN FILM WITH MATALLIC FILM AND SHALL BE CONTINUOUSLY MARKED TO IDENTIFY THE REFERENCED PIPELINE. THE TAPE SHALL BE INSTALLED EIGHTEEN INCHES DIRECTLY ABOVE THE PIPE.

18. ALL NON-METALLIC WATERLINES SHALL HAVE #12 SINGLE STRAND UF RATED INSULATED COPPER WIRE ATTACHED. THE ENDS NEED TO BE SEALED WITH LIQUID TAPE.

19. SINGLE RESIDENTIAL WATER SERVICES SHALL BE A COPPER 1" MINIMUM, OR ENDOT, ENDOTRACE POLY-TUBE (MEETS THE SPECIFICATIONS OF NSF-14, AND AWWA C901.)

20. ALL WATER MAINS SHALL BE NSF-APPROVED FOR POTABLE WATER USE, AND SHALL HAVE A MINIMUM COVER OF 36 INCHES.

21. WATER MAINS SHALL BE DUCTILE IRON PIPE (D.I.P.), CLASS 350, CEMENT LINED UNLESS OTHER-WISE APPROVED BY THE CITY. ALL NON DUCTILE IRON PIPE HORIZONTAL DIRECTIONAL DRILL WATER MAINS SHALL HAVE A MINIMUM WORKING PRESSURE RATING OF 160 PSI. THE CITY MAY REQUIRE A HIGHER PRESSURE RATING DEPENDENT ON SITE CONDITIONS.

22. ALL POTABLE WATER MAINS SHALL USE A THRUST RESTRAINT JOINT METHOD IN COMPLIANCE WITH THE DUCTILE IRON PIPE RESEARCH ASSOCIATION (DIPRA) GUIDELINES.

23. MEGALUGS, BOLTLESS RESTRAINED JOINTS, GRIPPER GASKETS, OR STAR GRIPS SHALL BE USED ON ALL RESTRAINED JOINT INSTALLATIONS. MINIMUM DEPTH OF BURY ON PIPES NOT MEETING REQUIRED COVER REQUIREMENTS SHALL FOLLOW THE MOST RECENT DIPRA THRUST RESTRAINT DESIGN GUIDELINES.

24. GRIPPER RING GASKETS SHALL BE USED AS APPROPRIATE FOR RESTRAINING PRESSURE PIPE TO FITTINGS, VALVES, ETC.

25. WATER VALVES SHALL BE PLACED AT ALL STREET INTERSECTIONS AND AT MAXIMUM SPACING OF 750 FEET. SPACING OF VALVES ON PRIMARY TRANSMISSION MAINS WILL BE DETERMINED BY THE CITY.

26. AT ALL WATER MAIN TEES AND VALVES SHALL BE INSTALLED ON ALL LEGS EXCEPT ONE.

27. APPROVED WATER VALVE TYPES ARE THE FOLLOWING:
    A. RESILIENT SEAT GATE VALVES (AWWA C-509)
    B. TAPPING VALVES WITH MECHANICAL TAPPING SLEEVE.

28. ALL WATER VALVES, INCLUDING CONCRETE COLLAR (WITH DEBRIS CAP), SHALL BE ADJUSTED TO FINISHED GRADE AND THE VALVE BOX LID, PRIMED PAINTED BLUE TO MAKE THEM PLAINLY VISIBLE.

29. UPON FINAL ACCEPTANCE OF NEW WATER SYSTEMS, WATER VALVES SHALL BE COMPLETELY OPENED BY PUBLIC UTILITIES PERSONNEL. AT NO TIME SHALL CONTRACTOR OPERATE ANY EXISTING VALVES WITHOUT A CITY INSPECTOR PRESENT.

30. ALL VALVES 2" AND SMALLER SHALL BE CURB STOPS. VALVES LARGER THAN 2" SHALL BE GATE VALVES.

POTABLE WATER CONSTRUCTION & DESIGN STANDARDS
(CONT'D)

31. TYPICALLY, A MINIMUM OF ONE FIRE HYDRANT SHALL BE LOCATED AT EVERY INTERSECTION. OTHER FIRE HYDRANTS SHALL BE LOCATED SO AS TO PRODUCE A MAXIMUM 500 FOOT RADIUS OF COVERAGE. ALL FIRE HYDRANTS SHALL BE CONSTRUCTED TO MAKE THEM EASILY ACCESSIBLE TO FIRE PERSONNEL. THE PRIMARY HYDRANT PORT IS TO FACE THE STREET.

32. IN AREAS WHERE RECLAIMED WATER IS NOT AVAILABLE THE CONTRACTOR SHALL BE REQUIRED TO TRANSFER THE WATER FROM THE POTABLE WATER LINES WITH NECESSARY BACKFLOW PREVENTION DEVICES TO THE NON-POTABLE WATER LINES FOR UTILIZATION IN THEIR PRESSURE TEST.

33. THE CONTRACTOR SHALL BE REQUIRED TO PIG ALL POTABLE MAINS 6" OR GREATER IN DIAMETER. LAUNCHING AND EXTRACTION POINTS SHALL BE DETERMINED BY THE CONTRACTOR.

34. WITH RESPECT, TO FLUSHING, PIGGING, TESTING, AND TIE-IN CONNECTIONS, THE CITY RESERVES THE RIGHT TO REQUIRE WORK TO BE PERFORMED DURING PERIODS OF LOW FLOW (MIDNIGHT TO 6:00 A.M.) IN ORDER TO MINIMIZE SERVICE DISRUPTION TO EXISTING CUSTOMERS.

35. THE CITY RESERVES THE RIGHT TO PERFORM THE SAMPLING AND ANALYSIS FOR BACTERIOLOGICAL CLEARANCE OF THE WATER MAIN. ANY RETESTING WILL BE AT THE CONTRACTORS EXPENSE.

36. POTABLE WATER SYSTEM EXTENSIONS MAY NOT BE USED PRIOR TO FINAL TESTING, UNTIL CLEARANCE IS ACCEPTED BY THE CITY OF DAYTONA BEACH AND THE VOLUSIA COUNTY HEALTH DEPARTMENT.

37. A BACK FLOW PREVENTER (BFP) SHALL BE PLACED ON ALL POTABLE AND FIRELINES SERVING COMMERCIAL PROPERTIES AND RESIDENTIAL WHERE ALTERNATIVE WATER IS AVAILABLE. THE TYPE OF BACKFLOW PREVENTERS REQUIRED ARE AS FOLLOWS:

    POTABLE WATER SERVICE; REDUCED PRESSURE ZONE BFP
    FIRELINE SERVICING A FIRE SPRINKLER SYSTEM AND/OR PRIVATE FIRE HYDRANT; DOUBLE CHECK VALVE SYSTEM
    FIRELINE; DOUBLE CHECK VALVE SYSTEM

    IN CASES WHERE A WATER LINE SERVES BOTH DOMESTIC AND FIRE SERVICES, A REDUCED PRESSURE ZONE BFP SHALL BE REQUIRED.

38. ALL JACK & BORES REQUIRED WITH COMMERCIAL DEVELOPMENTS SHALL BE AT THE SOLE COST OF THE OWNER \ DEVELOPER.

39. ALL C-900 PVC PIPE REQUIREMENTS ARE REFERENCED TO THE C-900-97 STANDARDS. DR UPGRADES FOR BURST PROTECTION MAY BE REQUIRED WHEN USING THE C-900-07 STANDARDS.

40. CHLORINATED WATER MUST BE DE-CHLORINATED PRIOR TO DISCHARGE INTO ANY JURISDICTIONAL WETLAND OR WATER BODY AS PER AWWA STANDARD, ANSI/AWWA C655-09.

POTABLE WATER CONSTRUCTION & DESIGN STANDARDS

TESTING REQUIREMENTS:

1. ON ALL PROJECTS OTHER THAN THOSE INITIATED BY THE CITY THE CONTRACTOR SHALL EMPLOY AN INDEPENDENT TESTING LABORATORY AT HIS OWN EXPENSE TO INSURE THAT COMPACTION OF ALL FILL MATERIAL IS COMPLETED PROPERLY. HOWEVER, ON ALL CITY PROJECTS THE TESTING WILL BE DONE IN ACCORDANCE WITH THE PLANS AND SPECIFICATIONS. TESTS SHALL BE DONE ONE FOOT ABOVE THE PIPE AND THEN AT ONE FOOT VERTICAL INTERVALS UNTIL FINAL GRADE IS REACHED. INDENTIFICATION OF TEST LOCATIONS SHALL BE CLEARLY INDICATED ON TEST REPORTS. TEST RESULTS SHALL BE FORWARDED PROMPTLY TO THE CITY'S DESIGNATED SITE INSPECTOR.

2. ALL POTABLE WATER MAINS SHALL BE FLUSHED, DISINFECTED, PRESSURE TESTED AND BAC-TERIOLOGICALLY CLEARED FOR SERVICE WHEN APPROPRIATE IN ACCORDANCE WITH THE LATEST AWWA STANDARDS AND THE FLORIDA DEPARTMENT OF ENVIROMENTAL PROTECTION REQUIREMENTS. THE CONTRACTOR SHALL NOTIFY THE CITY'S DESIGNATED INSPECTOR WHO SHALL COORDINATE WITH CITY PERSONNEL AT THE WATER TREATMENT PLANT AT LEAST 3 (THREE) BUSINESS DAYS PRIOR TO BEGINNING FLUSH OF THE MAINS PRIOR TO THE COMMENCEMENT OF PRESSURE TESTING. NO HOSE OR FIRE HYDRANT SHALL BE USED IN THE COLLECTION OF BACTERIOLOGICAL SAMPLES. THE SAMPLING TAP MUST BE DEDICATED AND CLEAN, AND DISINFECTED AND FLUSHED PRIOR TO SAMPLING. SAMPLING TAP SHALL BE SMOOTH, UNTHREADED 1/2" HOSE BIB. DISINFECTION & SAMPLING SHALL BE SCHEDULED AT THE CITY'S CONVENIENCE.

3. PRESSURE TEST FOR TAPPING SADDLES AND VALVES. (MINIMUM OF 30 MINUTES AT 150 PSI OR 30 MINUTES AT MANUFACTURERS LABILED TESTING PRESSURE).

4. WATERMAINS SHALL BE PRESSURE TESTED TO 150 PSI FOR 4 HOURS. TESTING SHALL BE IN ACCORDANCE WITH AWWA C-600 AND AWWA C-605 AS APPLICABLE, WITH ALLOWABLE LEAKAGE TO BE X GAL/HR PER X" DIA. OF PIPE, PER X' OF MAIN TO BE TESTED.

ALLOWABLE LEAKAGE PER 1000 FT. OF PIPELINE * -GPH

AVERAGE PRESSURE TEST (PSI)	NOMINAL PIPE DIAMETER - INCHES																		AVERAGE TEST PRESSURE (PSI)
	3	4	6	8	10	12	14	16	18	20	24	30	36	42	48	54	60	64	
450	0.48	0.64	0.95	1.27	1.59	1.91	2.23	2.55	2.87	3.18	3.82	4.78	5.73	6.69	7.64	8.60	9.56	10.19	450
400	0.45	0.60	0.90	1.20	1.50	1.80	2.10	2.40	2.70	3.00	3.60	4.50	5.41	6.31	7.21	8.11	9.01	9.61	400
350	0.42	0.56	0.84	1.12	1.40	1.69	1.97	2.25	2.53	2.81	3.37	4.21	5.06	5.90	6.74	7.58	8.43	8.99	350
300	0.39	0.52	0.78	1.04	1.30	1.56	1.82	2.08	2.34	2.60	3.12	3.90	4.68	5.46	6.24	7.02	7.80	8.32	300
275	0.37	0.50	0.75	1.00	1.24	1.49	1.74	1.99	2.24	2.49	2.99	3.73	4.48	5.23	5.98	6.72	7.47	7.97	275
250	0.36	0.47	0.71	0.95	1.19	1.42	1.66	1.90	2.14	2.37	2.85	3.56	4.27	4.99	5.70	6.41	7.12	7.60	250
225	0.34	0.45	0.68	0.90	1.13	1.35	1.58	1.80	2.03	2.25	2.70	3.38	4.05	4.73	5.41	6.03	6.76	7.21	225
200	0.32	0.43	0.64	0.85	1.06	1.28	1.48	1.70	1.91	2.12	2.55	3.19	3.82	4.46	5.09	5.73	6.37	6.80	200
175	0.30	0.40	0.59	0.80	0.99	1.19	1.39	1.59	1.79	1.98	2.38	2.98	3.58	4.17	4.77	5.36	5.96	6.36	175
150	0.28	0.37	0.55	0.74	0.92	1.10	1.29	1.47	1.66	1.84	2.21	2.76	3.31	3.86	4.41	4.97	5.52	5.88	150
125	0.25	0.34	0.50	0.67	0.84	1.01	1.18	1.34	1.51	1.68	2.01	2.52	3.02	3.53	4.03	4.53	5.04	5.37	125
100	0.23	0.30	0.45	0.60	0.75	0.90	1.05	1.20	1.35	1.50	1.80	2.25	2.70	3.15	3.60	4.05	4.50	4.80	100

** IF THE PIPELINE UNDER TEST CONTAINS SECTIONS OF VARIOUS DIAMETERS, THE ALLOWABLE LEAKAGE WILL BE THE SUM OF THE COMPUTED LEAKAGE FOR EACH SIZE.*

$$L = \frac{SD\sqrt{P}}{133{,}200}$$

WHERE:

L = ALLOWABLE LEAKAGE, IN GALLONS PER HOUR
S = LENGTH OF PIPE TESTED, IN FEET
D = NOMINAL DIAMETER OF PIPE, IN INCHES
P = AVERAGE TEST PRESSURE DURING THE LEAKAGE TEST, IN POUNDS PER SQUARE INCH (GAUGE)

Guidelines for the Acceptance of New Water Mains from Contractors

Contact the Utilities Department at 386-671-8871 or 386-671-8827 a min. of 5 business days prior to beginning any potable water system contruction. Utilities Inspector will coordinate with the City's Water Distribution Division to schedule the tap of the main. DOH Permit to be forwarded to the Water/Wastewater (W/WW) Inspector with the Regulatory Compliance Division.

Contractor to install tapping saddle/sleeve and disinfected valve on the existing water main under inspection of the Utilities Department. All materials must be swabbed with a 5% chlorine solution.

Pressure test the tapping saddle/sleeve and valve. (Min. 30 minutes at manufacturer recommended pressure.)

City's Water Distribution Department will tap the existing main.

All mains 6" and larger (greater than 100 LF) must be **pigged** and **flushed** by the contractor under inspection of the water/wastewater inspectors. Contact Bob Terpstra between 07:30 - 14:00 hrs. Monday - Thursday excluding holidays at 386-671-8809 or 386-717-7839 to schedule.

Contractor must pressure test the new main under inspection of the W/WW Inspector. (Minimum 4 hrs at 150 psi) Refer to CODB Standard Details

Pressure Test **Passed**

Pressure Test **Failed**

Repair leaks

Submit Preliminary As-Builts to Utilities Engineering. (1 AutoCAD CD and 1 Paper Copy in State Plane Coordinates NAD 83). Once preliminary as-builts are acceptable, W/WW Inspector will schedule the chlorination. **(Chlorination is scheduled Mon. thru Wed. with 48 hrs advance notice required.)**

Contractor will super chlorinate the new main in accordance with AWWA C651-05 (or most recent version). The chlorine solution must be greater than 25 mg/L (50 mg/L preferred) and must remain in the water main for at least 24 hrs with a final residual of 10 mg/L. The chlorination **must** be monitored by the W/WW Inspector. An alternative method of "slug" chlorination can be utilized. Initial chlorine dose of 100 mg/L in contact for 3 hours with a final residual of 50 mg/L.

Flush main and reduce the chlorine residual to proper level (1-3 mg/L typical, not to exceed ambient chlorine residual from the WTP). Any water discharged to receiving water bodies shall be dechlorinated per AWWA standards.

Re-chlorination is required if the 2nd consecutive sample fails.

W/WW Inspector/CODB Lab will collect and test samples for 2 consecutive days per FDEP requirements.

Bacteriological test **passed** for 2 consecutive days.

Bacteriological test **failed**.

Submit Final As-built Drawings (1 Mylar & 2 Paper Copies, 1 CD with CAD drawings and pdf's). Bacteriological Test Results and FDEP Clearance Application to the Utilities Engineering Division.

Utilities Engineering signs and delivers the FDEP clearance app. to the Health Department.*

FDEP Letter of Clearance Received.

Water Distribution Division will open valve and place water main into service.

*Should the bacteriological samples expire prior to DOH submittal re-chlorination and re-sampling will be required at the contractor's cost using the City personnel and laboratory.

RETURN TO TOC

WATER - TABLE OF DAILY FLOWS FOR VARIOUS OCCUPANCIES

Types of Establishments	
Apartments	196.8 gpd
Banquet hall (per seat)	15 gpd
Bars and cocktail lounges	5 gpcd
Bathroom (non-residential)	250 gpd
Beauty shop (per seat)	150 gpd
Boarding schools (students and staff)	50 gpd
Boarding houses	50 gpcd
Bowling alleys (toilet wastes only, per lane)	75 gpd
Country clubs, per member	15 gpcd
Day schools (with cafeteria, no gymnasium or showers)	8 gpcd
Day schools (with cafeterias, gymnasiums & showers)	20 gpcd
Day workers at office and schools	15 gpcd
Dentist, per wet chair	200 gpd
Drive-in theaters (per car space)	5 gpd
Factories (with showers)	25 gpcd
Factories (no showers)	10 gpd/100 sq. ft.
Funeral home	10 gpd/100 sq. ft.
Gas stations (no car wash)	400 gpd
Hospitals (with laundry) (per bed)	200 gpd
Hospitals (no laundry) (per bed)	150 gpd
Hotels and motels (per room & unit)	100 gpd
Laundromat (per washing machine)	200 gpcd
Mobile home park (per trailer)	200 gpd
Movie theaters, auditoriums, churches (per seat)	3 gpd
Nursing homes	125 gpd/100 sq. ft.
Office buildings	10 gpd/100 sq. ft.
Public institutions (other than those listed herein)	75 gpcd
Restaurants (per seat)	35 gpd
Restaurants (take-out)	35 gpd/100 sq. ft. (350 gpd min.)
Restaurants (Fast Food) (per seat)	25 gpd
Single-family residence	196.8 gpd
Townhouse residence	196.8 gpd
Shopping centers	10 gpd/100 sq. ft.
Stadiums, frontons, ball parks, etc. (per seat)	3 gpd
Stores, without kitchen wastes	5 gpd/100 sq. ft.
Speculative buildings	10 gpd plus 10 gpd/100 sq. ft.
Warehouses	30 gpd plus 10 gpd/1,000 sq. ft.

*** CITY WILL CONSIDER ALTERNATE FLOW RATES FOR VARIOUS ESTABLISHMENTS IF THE EOR CAN PROVIDE SUPPORTING DATA.***

WATER DESIGN BASIS

AVERAGE DAILY, MAXIMUM DAILY AND PEAK FLOWS

ENGINEER TO DETERMINE AVERAGE DAILY, MAXIMUM DAILY AND PEAK HOUR FLOWS FOR CITY REVIEW AND APPROVAL..

FIRE FLOW REQUIREMENTS

Fire flow requirements shall be determined in accordance with the applicable local fire department codes and/or ISO standards.

RETURN TO TOC

POTABLE WATER MAIN TO BE CENTERED ABOVE THE CROSSING MAIN FOR MAXIMUM JOINT SEPARATION.

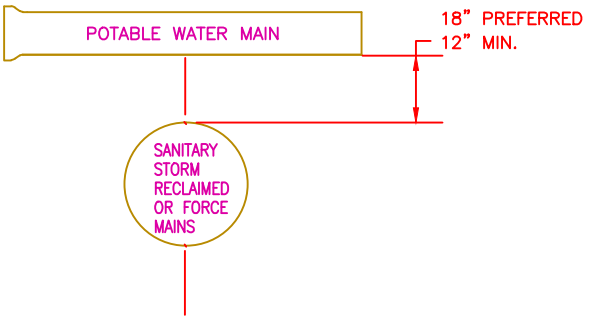

CROSS SECTIONAL VIEW

A MINIMUM HORIZONTAL SEPARATION OF 6' (OUTSIDE TO OUTSIDE) SHALL BE MAINTAINED BETWEEN RECLAIMED WATER LINES AND POTABLE WATER MAINS.

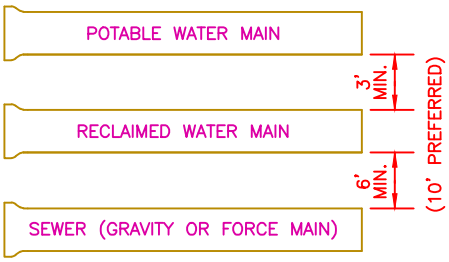

A MINIMUM HORIZONTAL SEPARATION OF 6' (OUTSIDE TO OUTSIDE) SHALL BE MAINTAINED BETWEEN RECLAIMED WATER LINES AND SEWER COLLECTION.

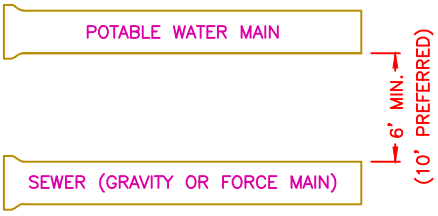

A MINIMUM HORIZONTAL SEPARATION OF 6' (OUTSIDE TO OUTSIDE), SHALL BE MAINTAINED BETWEEN SEWER COLLECTION LINES AND POTABLE WATER MAINS.

PLAN VIEW

NEW OR RELOCATED, UNDERGROUND WATER MAINS SHALL BE LAID TO PROVIDE A MINIMUM HORIZONTAL DISTANCE OF SIX FEET, AND PREFERABLY TEN FEET, BETWEEN THE OUTSIDE OF THE WATER MAIN AND THE OUTSIDE OF ANY EXISTING OR PROPOSED GRAVITY– OR PRESSURE–TYPE SANITARY SEWER, WASTEWATER FORCE MAIN, OR PIPELINE CONVEYING RECLAIMED WATER NOT REGULATED UNDER PART III OF CHAPTER 62–610, F.A.C. THE MINIMUM HORIZONTAL SEPARATION DISTANCE BETWEEN WATER MAINS AND GRAVITY–TYPE SANITARY SEWERS SHALL BE REDUCED TO THREE FEET WHERE THE BOTTOM OF THE WATER MAIN IS LAID AT LEAST SIX INCHES ABOVE THE TOP OF THE SEWER. NEW OR RELOCATED, UNDERGROUND WATER MAINS CROSSING ANY EXISTING OR PROPOSED GRAVITY– OR VACUUM–TYPE SANITARY SEWER SHALL BE LAID SO THE OUTSIDE OF THE WATER MAIN IS AT LEAST TWELVE INCHES, AND PREFERABLY EIGHTEEN INCHES, ABOVE OR AT LEAST TWELVE INCHES BELOW THE OUTSIDE OF THE OTHER PIPELINE. HOWEVER, IT IS PREFERABLE TO LAY THE POTABLE WATER MAIN ABOVE THE OTHER PIPELINE. NEW OR RELOCATED UNDERGROUND WATER MAINS CROSSING ANY EXISTING OR PROPOSED PRESSURE–TYPE SANITARY SEWER, WASTEWATER OR STORMWATER FORCE MAIN, OR PIPELINE CONVEYING RECLAIMED WATER SHALL BE LAID SO THE OUTSIDE OF THE WATER MAIN IS AT LEAST 12 INCHES ABOVE OR BELOW THE OUTSIDE OF THE OTHER PIPELINE AND CONDUIT. HOWEVER, IT IS PREFERABLE TO LAY THE WATER MAIN ABOVE THE OTHER PIPELINE.

AT THE UTILITY CROSSINGS DESCRIBED ABOVE, ONE FULL LENGTH OF WATER MAIN PIPE SHALL BE CENTERED ABOVE OR BELOW THE OTHER PIPELINE SO THE WATER MAIN JOINTS WILL BE AS FAR AS POSSIBLE FROM THE OTHER PIPELINE. ALTERNATIVELY, AT SUCH CROSSINGS, THE PIPES SHALL BE ARRANGED SO THAT ALL WATER MAIN JOINTS ARE AT LEAST THREE FEET FROM ALL JOINTS IN VACUUM–TYPE SANITARY SEWERS, OR PIPELINES CONVEYING RECLAIMED WATER REGULATED UNDER PART III OF CHAPTER 62–610, F.A.C., AND AT LEAST SIX FEET FROM ALL JOINTS IN GRAVITY– OR PRESSURE–TYPE SANITARY SEWERS, WASTEWATER FORCE MAINS, OR PIPELINES CONVEYING RECLAIMED WATER NOT REGULATED UNDER PART III OF CHAPTER 62–610 F.A.C.

RETURN TO TOC

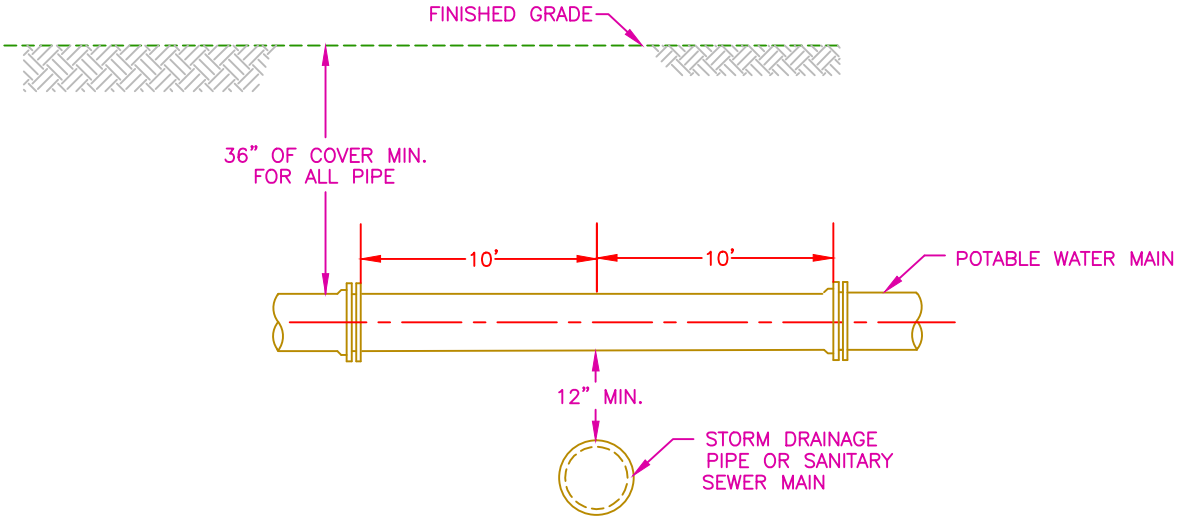

TYPE 'A'
CROSS SECTIONAL VIEW

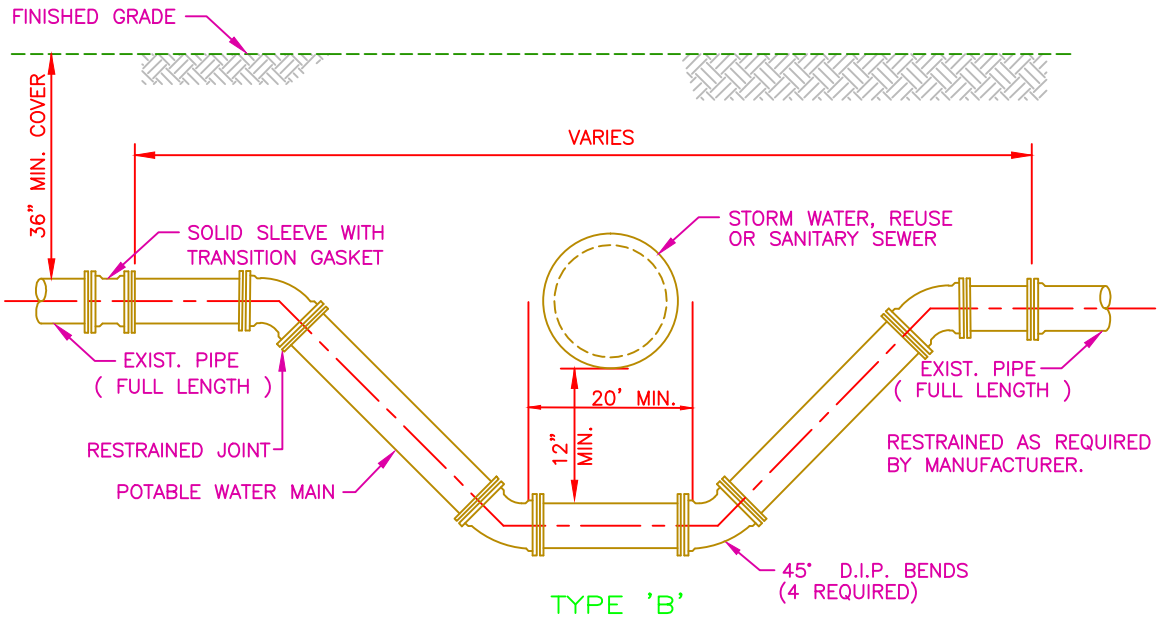

TYPE 'B'
CROSS SECTIONAL VIEW

NOTES:

1. TYPE "A" CROSSING SHALL BE THE PREFERRED CONFIGURATION. TYPE "B" MAY BE USED ONLY UPON SPECIFIC APPROVAL.
2. CONCRETE ENCASEMENT OF A SANITARY SEWER MAIN IS AN ALTERNATIVE METHOD OF ADDRESSING A CONFLICT WHEN 12" VERTICAL SEPARATION DISTANCE CANNOT BE MAINTAINED. IN SUCH INSTANCES, THE MINIMUM PIPE VERTICAL SEPARATION SHALL BE 9". (NOTE THAT THIS DOES NOT APPLY TO SERVICE LATERALS. SEE STANDARD DETAILS S-3A AND S-3B).
3. LOWERING OF EXISTING WATER MAIN & FORCE MAIN BY DEFLECTION METHOD MAY BE ACCEPTABLE IF EXISTING FIELD CONDITIONS PERMIT AND APPROVAL IS RECEIVED FROM CODB.
4. LENGTH OF SECTION BASED ON MINIMUM LENGTH AS DETERMINED BY DIPRA RESTRAINED JOINT MANUAL.
5. INSTALL RESTRAINED JOINTS, AS REQUIRED, FROM DEFLECTION POINT IN BOTH DIRECTIONS (20' MIN.).

RETURN TO TOC

THE CITY OF DAYTONA BEACH
UTILITIES DEPARTMENT

TYPICAL PIPE
CROSSING
DETAIL
W-8

FY-15/16	
Drawing Date: 01/08	
Drawn By: KLH	
Checked By: JMP	
Scale: NTS	
Revision Date: 12/12	
File Name: Pipe Crossing W-8	
Page 12	

LOCATION OF PUBLIC WATER SYSTEM MAINS IN ACCORDANCE WITH F.A.C. RULE 62-555.314

Other Pipe	Horizontal Separation	Crossings (1)	Joint Spacing @ Crossings (Full Joint Centered)
Storm Sewer, Stormwater Force Main, Reclaimed Water (2)	Water Main 3 ft. minimum	Water Main 12 inches is the minimum, except for storm sewer, then 6 inches is the minimum and 12 inches is preferred	Alternate 3 ft. minimum Water Main
Vacuum Sanitary Sewer	Water Main 10 ft. preferred 3 ft. minimum	Water Main 12 inches is preferred 6 inches minimum	Alternate 3 ft. minimum Water Main
Gravity or Pressure Sanitary Sewer, Sanitary Sewer Force Main, Reclaimed Water (4)	Water Main 10 ft. preferred 6 ft. minimum (3)	Water Main 12 inches is the minimum, except for gravity sewer, then 6 inches is the minimum and 12 inches is preferred	Alternate 3 ft. minimum Water Main
On-Site Sewage Treatment & Disposal System	10 ft. minimum	---	---

(1) Water main should cross above other pipe. When water main must be below other pipe, the minimum separation is 12 inches.
(2) Reclaimed water regulated under Part III of Chapter 62-610, F.A.C.
(3) 3 ft. for gravity sanitary sewer where the bottom of the water main is laid at least 6 inches above the top of the gravity sanitary sewer.
(4) Reclaimed water not regulated under Part III of Chapter 62-610, F.A.C.

Disclaimer - This document is provided for your convenience only. Please refer to F.A.C. Rule 62-555.314 for additional construction requirements.

RETURN TO TOC

FY-15/16
Drawing Date: 01/08
Drawn By: KLH
Checked By: JMP
Scale: NTS
Revision Date:
File Name: Water Main Separation Chart W-9
Page 13

WATER MAIN
SEPARATION CHART
W-9

THE CITY OF DAYTONA BEACH
UTILITIES DEPARTMENT

SCHEDULE OF LENGTHS OF RESTRAINED DIP (FT.)					
FITTING	90° BEND	45° BEND	22.5° BEND	11.25° BEND	TEE OR DEAD END
PIPE SIZE (IN.) :					
4"	21 (26)	18 (18)	18 (18)	18 (18)	37 (55)
6"	30 (36)	18 (18)	18 (18)	18 (18)	52 (78)
8"	38 (45)	18 (18)	18 (18)	18 (18)	67 (100)
10"	45 (54)	18 (22)	18 (18)	18 (18)	81 (122)
12"	52 (63)	22 (26)	18 (18)	18 (18)	94 (141)
14"	60 (72)	25 (30)	18 (18)	18 (18)	107 (160)
16"	66 (80)	27 (33)	18 (18)	18 (18)	120 (180)
18"	74 (87)	31 (36)	18 (18)	18 (18)	132 (198)
20"	80 (94)	33 (39)	18 (18)	18 (18)	144 (216)
24"	92 (108)	38 (45)	18 (22)	18 (18)	167 (250)
30"	106 (128)	44 (53)	21 (25)	18 (18)	199 (298)
36" *	69 (82)	28 (34)	18 (18)	18 (18)	170 (204)
42" *	76 (92)	31 (37)	18 (18)	18 (18)	191 (229)
48" *	90 (106)	40 (46)	18 (18)	18 (18)	212 (254)

LENGTHS BETWEEN HEAVY LINES INDICATE ONE FULL LENGTH (18' MIN.) OF PIPE TO BE RESTRAINED.

TABLE SHOWS MINIMUM LENGTH OF PIPE EACH WAY FROM FITTING FOR WHICH RESTRAINT IS REQUIRED.

TABLE APPLIES TO DUCTILE IRON PIPE FOR THE FOLLOWING CONDITIONS:

TEST PRESSURE: 150 PSIG
SOIL TYPE: SP
COVER DEPTH: 3 FEET (MIN.)
SAFETY FACTOR: 1.5
TRENCH TYPE: 2

VALUES IN PARENTHESIS (X) ARE FOR PIPE ENCASED IN POLYETHYLENE.

* VALUES APPLY TO DUCTILE IRON PIPE AT 50 PSI TEST PRESSURE.

RETURN TO TOC

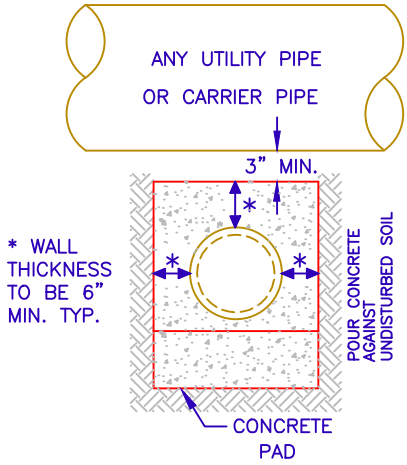

SECTION "A"–"A"

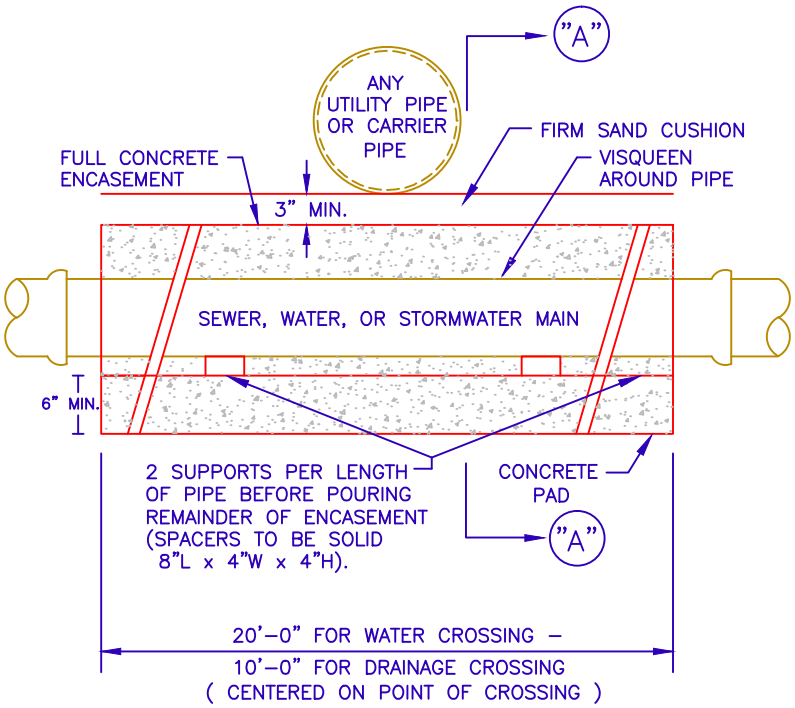

ELEVATION

NOTES:

1. ALL CONCRETE SHALL BE 3000 PSI MINIMUM STRENGTH AT 28 DAYS.
2. MAIN SHALL BE LOCATED ABOVE OR BELOW ENCASEMENT AS SHOWN ON PLANS OR AS DETERMINED IN THE FIELD, USE ENCASEMENT WHERE VERTICAL CLEARANCE IS LESS THAN 12 INCHES.

RETURN TO TOC

THE CITY OF DAYTONA BEACH
UTILITIES DEPARTMENT

UTILITY PIPE
CONCRETE ENCASEMENT
DETAIL
W–11

FY–15/16
Drawing Date: 01/08
Drawn By: KLH
Checked By: JMP
Scale: NTS
Revision Date: 05/13
File Name: Utility Pipe Concrete Encasement W–11
Page 15

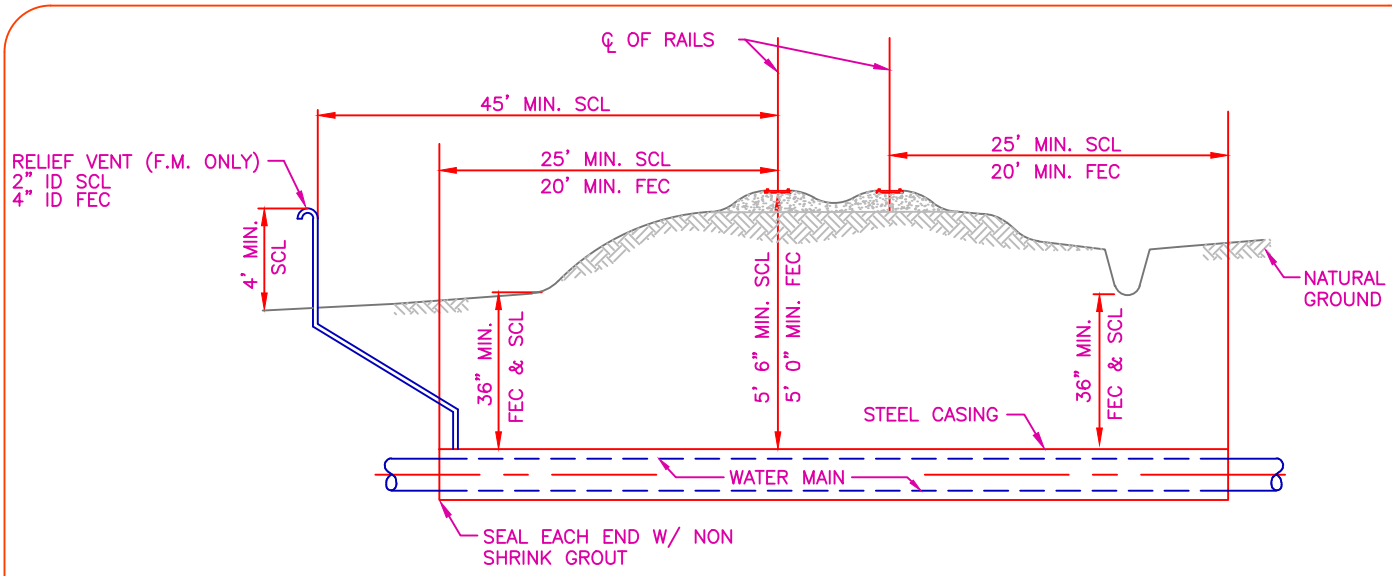

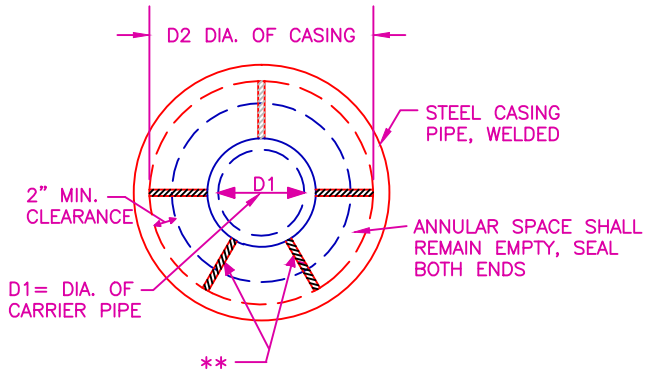

TYPICAL RAILROAD CROSSING

NTS

NOTE TO ENGINEER: CROSSING DETAIL SHALL BE TO SCALE AND SHOW EXISTING UTILITIES, CLEARANCES, CASING LENGTH, LOCATION OF PAVED ROAD AND LIMITS OF RIGHT-OF-WAY

CARRIER PIPE AND CASING PIPE SIZES (MIN.)														
CARRIER PIPE NOM. DIA. (D1)	4	6	8	10	12	14	16	18	20	24	30	36	42	48
CASING PIPE NOM. DIA. (D2)	14	16	18	22	24	30	30	30	36	36	48	54	60	66
WALL THICKNESS-INCHES *	PER AUTHORITY HAVING JURISDICTION													

NOTES:

1. MINIMUM COVER FOR TOP OF CASING TO R/R BASE SHALL BE 5.6' (SCL), 5.0' (FEC). MINIMUM COVER FOR TOP OF CASING ON ALL GROUND COVER SHALL BE 3.0'.
2. ROTATION OF CARRIER PIPE INSIDE THE CASING PIPE WILL NOT BE PERMITTED. RESTRAINED MECHANICAL OR FLANGED JOINT PIPE SHALL BE USED TO HELP PREVENT SUCH ROTATION.
3. SHOP DRAWINGS SHALL BE SUBMITTED OF CASING & CARRIER PIPE INSTALLATION FOR APPROVAL PRIOR TO FABRICATION OF PIPING, CASING, AND APPURTENANCES. CERTIFICATION OF CASING PIPE IS REQUIRED.
4. GROUTING OF SPACE BETWEEN CASING AND CARRIER PIPE NOT REQUIRED UNLESS NEGATIVE FLOTATION EXISTS.
5. WELDING OF CASING PIPE TO BE DONE BY CERTIFIED WELDER. ALL ENDS OF CASING PIPE SHALL BE CHAMFERED PRIOR TO ANY WELDING. SEAL END OF CASING PIPE WITH NON SHRINK GROUT.
6. CITY INSPECTOR SHALL BE PRESENT THROUGHOUT ALL BORE AND JACK ACTIVITIES.

* WITHIN THE CITY OF DAYTONA BEACH RIGHT OF WAY, USE CURRENT FDOT STANDARDS.

** SPECIALLY DESIGNED SPACERS SHALL BE USED IN ACCORDANCE WITH MANUFACTURER'S SPECIFICATIONS. USE CASCADE CASING SPACERS OR PRE-APPROVED EQUAL.

RETURN TO TOC

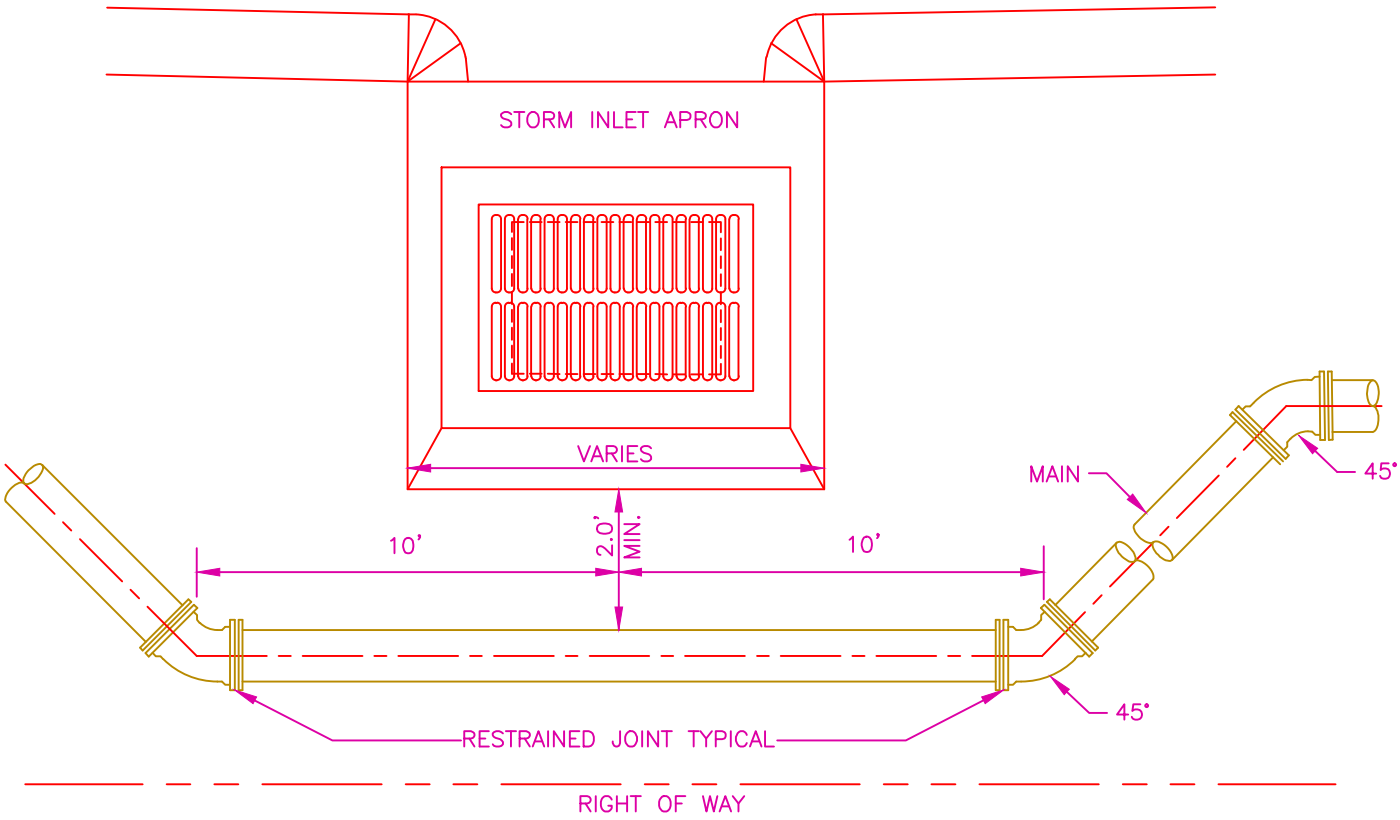

PLAN VIEW

NTS

NOTES:

1. MAIN MAY PASS OVER STORM LINE IF 36" OF COVER IS PROVIDED OVER WATER MAIN.
2. PIPE MAY BE DEFLECTED AROUND DRAINAGE INLET IN ACCORDANCE WITH THE RESTRAINED JOINT GUIDELINES OF THE DIPRA.

RETURN TO TOC

THE CITY OF DAYTONA BEACH
UTILITIES DEPARTMENT

WATERMAIN INSTALLATION BETWEEN STORM INLET AND R.O.W. DETAIL
W-13

FY-15/16	
Drawing Date:	01/08
Drawn By:	KLH
Checked By:	JMP
Scale:	NTS
Revision Date:	12/12
File Name: Watermain by Storm Inlet W-13	
Page	17

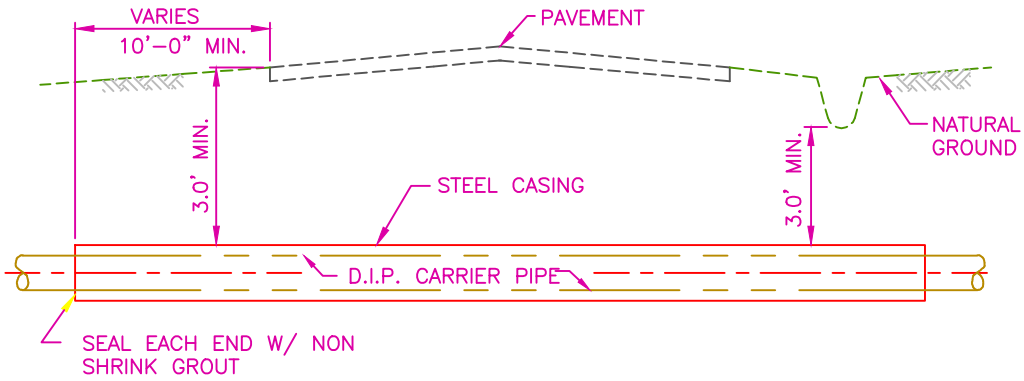

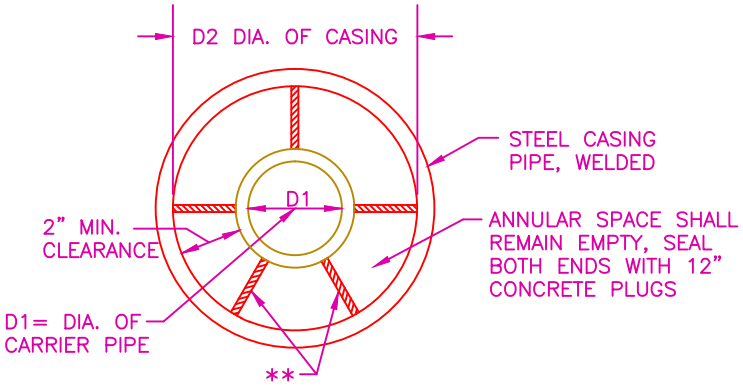

NTS

CARRIER PIPE AND CASING PIPE SIZES (MIN.)												
CARRIER PIPE NOM. DIA. (D1)	4	6	8	12	16	18	20	24	30	36	42	48
CASING PIPE NOM. DIA. (D2)	14	16	18	24	30	30	36	36	48	54	60	66
WALL THICKNESS-INCHES *	PER AUTHORITY HAVING JURISDICTION											

NOTES:

1. MINIMUM COVER FOR TOP OF CASING ON ALL CITY STREETS SHALL BE 3.0'
2. ROTATION OF CARRIER PIPE INSIDE THE CASING PIPE WILL NOT BE PERMITTED. RESTRAINED MECHANICAL OR FLANGED JOINT PIPE SHALL BE USED TO HELP PREVENT SUCH ROTATION.
3. SHOP DRAWINGS OF CASING & CARRIER PIPE INSTALLATION SHALL BE SUBMITTED FOR APPROVAL PRIOR TO FABRICATION OF PIPING, CASING, AND APPURTENANCES. CERTIFICATION OF CASING PIPE IS REQUIRED.
4. GROUTING OF SPACE BETWEEN CASING AND CARRIER PIPE NOT REQUIRED UNLESS NEGATIVE FLOTATION EXISTS.
5. WELDING OF CASING PIPE TO BE DONE BY STATE CERTIFIED WELDER. ALL ENDS OF CASING PIPE SHALL BE CHAMFERED PRIOR TO ANY WELDING. SEAL END OF CASING PIPE WITH NON SHRINK GROUT.
6. CITY INSPECTOR SHALL BE PRESENT THROUGHOUT ALL BORE AND JACK ACTIVITIES.

* WITHIN VOLUSIA COUNTY RIGHT OF WAY, USE CURRENT FDOT STANDARDS.

** SPECIALLY DESIGNED SPACERS SHALL BE USED IN ACCORDANCE WITH MANUFACTURER'S SPECIFICATIONS. USE CASCADE CASING SPACERS OR APPROVED EQUAL.

NOTE TO ENGINEER: CROSSING DETAIL SHALL BE TO SCALE AND SHOW EXISTING UTILITIES, CLEARANCES, CASING LENGTH, LOCATION OF PAVED ROAD AND LIMITS OF RIGHT OF WAY

RETURN TO TOC

THE CITY OF DAYTONA BEACH
UTILITIES DEPARTMENT

TYPICAL
BORE AND JACK
DETAIL
W-14

FY-15/16
Drawing Date: 01/08
Drawn By: KLH
Checked By: JMP
Scale: NTS
Revision Date: 12/12
File Name: Bore-Jack W-14

NOTE: TO DETERMINE THE MOST CURRENT REQUIREMENTS FOR STABILIZATION MATERIAL, BASE MATERIAL, AND ASPHALT MATERIAL PATCH AND THE REPLACEMENT DIMENSIONS CONTACT CITY ENGINEER IN THE PUBLIC WORKS DEPT AT 386-671-8610.

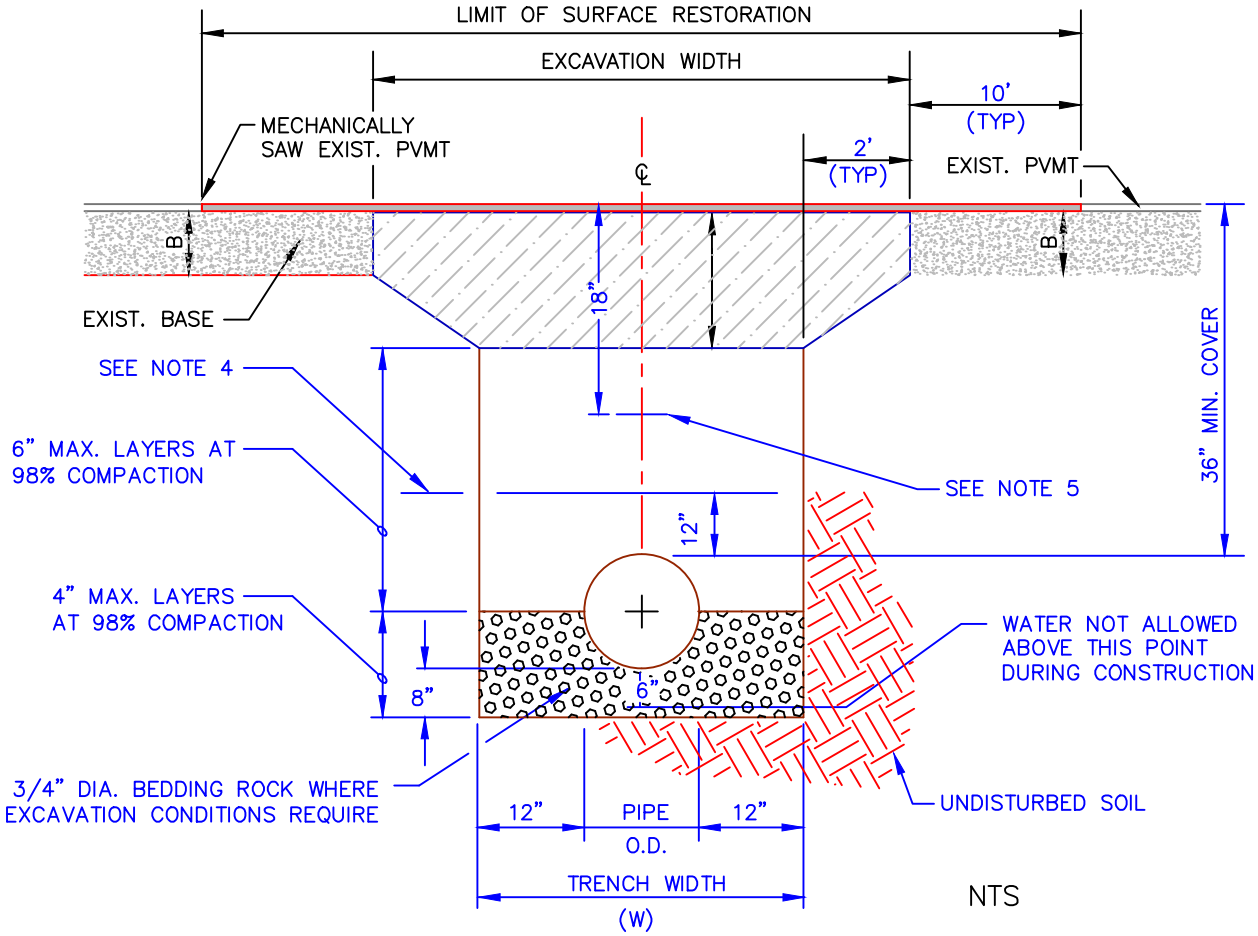

NOTES:

1. WHERE SOIL CONDITIONS CAN NOT BE MAINTAINED AS SHOWN ABOVE, PROVIDE APPROVED METHOD OF CONSTRUCTION.
2. SHEETING WILL BE REQUIRED AS DETERMINED IN THE FIELD.
3. COMPACTION PERCENTAGES SHOWN REFER TO A.A.S.H.T.O. T-180. PROVIDE COMPACTION TEST REPORTS TO CITY INSPECTOR.
4. MECHANICAL COMPACTION NOT ALLOWED BELOW THIS LEVEL.
5. FOR PVC PIPE ONLY - INSTALL METALLIC TAPE AND UF #12 INSULATED SINGLE STRAND COPPER WIRE OVER FULL LENGTH OF PIPE.
6. THE CONTRACTOR SHALL, UNLESS OTHERWISE NOTED, RESTORE ALL STRIPING, PAVEMENT MARKINGS, DELINEATORS, SIGNAGE AND TRAFFIC SIGNAL SYSTEM COMPONENTS DISTURBED DURING CONSTRUCTION ACTIVITIES. COST OF ALL WORK AND MATERIALS WILL BE CONSIDERED INCIDENTAL TO PATCH MATERIAL ITEMS.

RETURN TO TOC

THE CITY OF DAYTONA BEACH
UTILITIES DEPARTMENT

PAVEMENT CUT AND PATCH DETAIL W-15

FY-15/16	
Drawing Date: 01/08	
Drawn By: KLH	
Checked By: JMP	
Scale: NTS	
Revision Date: 05/13	
File Name: Pavement Cut & Patch W-15	
Page 19	

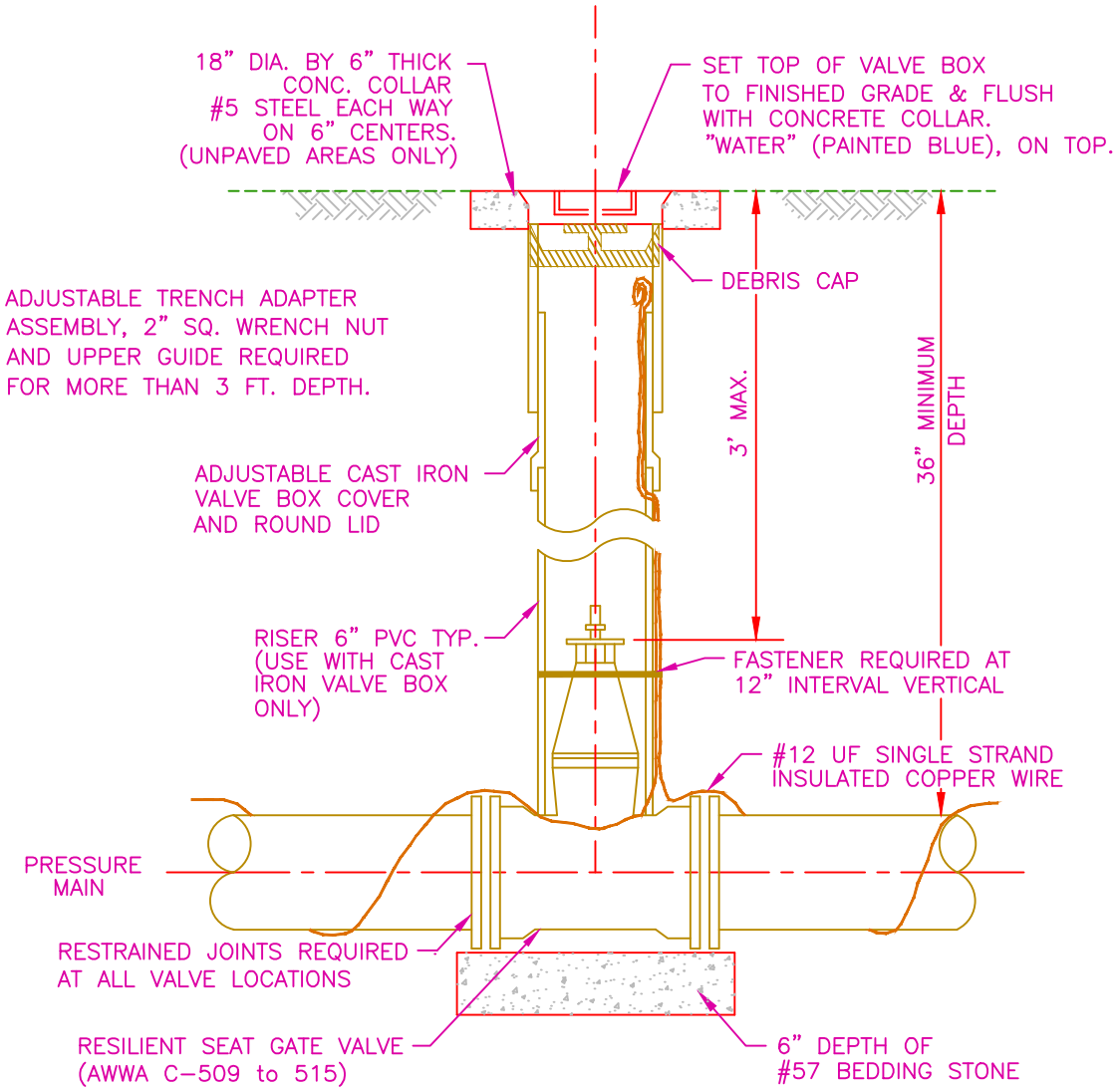

POTABLE WATER COVER

NOTES:

1. ROD OR BOLT TEE WHERE APPLICABLE.
2. SEE CODB'S APPROVED PRODUCT LIST FOR ACCEPTABLE MANUFACTURERS.
4. INSTALL RESTRAINED JOINTS, AS REQUIRED, FROM DEFLECTION POINT IN BOTH DIRECTIONS (20' MIN.)

RETURN TO TOC

THE CITY OF DAYTONA BEACH
UTILITIES DEPARTMENT

WATER VALVE AND VALVE BOX DETAIL
W-16

FY-15/16	
Drawing Date: 01/08	
Drawn By: KLH	
Checked By: JMP	
Scale: NTS	
Revision Date: 12/12	
File Name: Water Valve W-16	
Page 20	

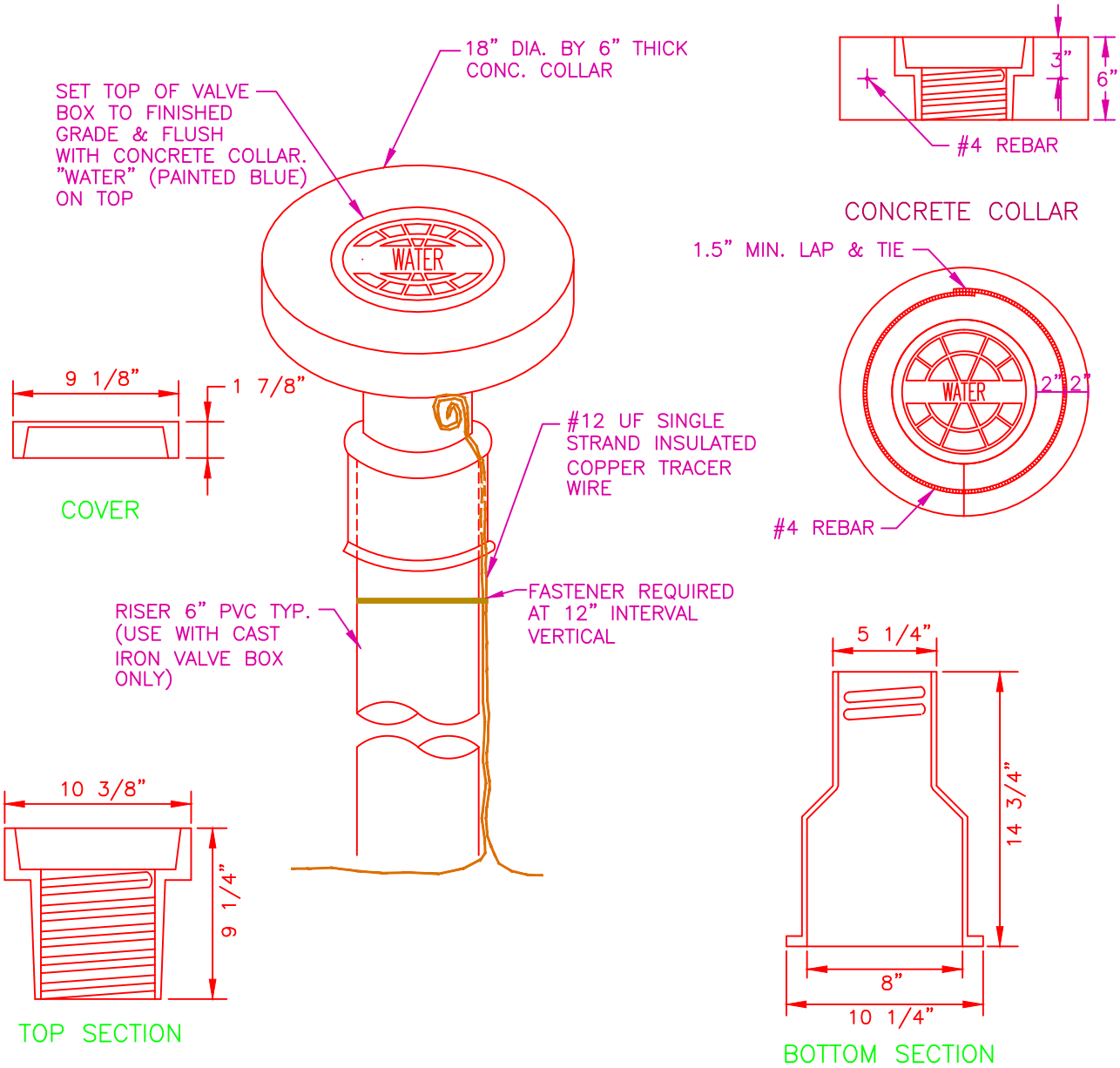

NOTE:

1. WATER MAIN VALVE BOX AND COVER SHALL BE ADJUSTABLE SCREW TYPE.
2. TRACER WIRE TO BE INSTALLED ON ALL NON-METALLIC MAINS

RETURN TO TOC

THE CITY OF DAYTONA BEACH
UTILITIES DEPARTMENT

MAIN VALVE BOX DETAIL
W-17

FY-15/16	
Drawing Date: 11/10	
Drawn By: KLH	
Checked By: JMP	
Scale: NTS	
Revision Date: 12/12	
File Name: Main Valve Box W-17	
Page 21	

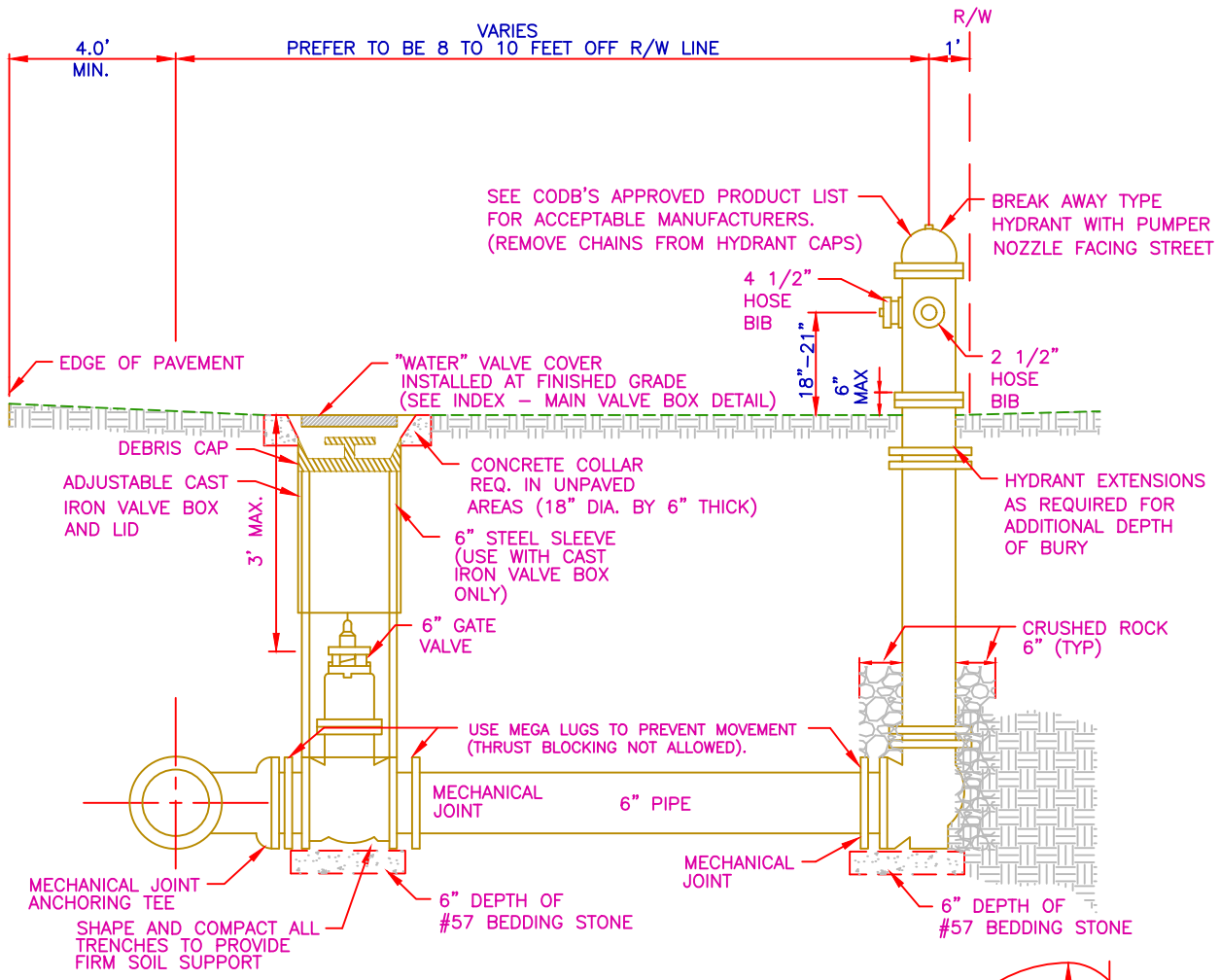

NOTES:

1. HYDRANTS SHALL BE OF THE SELF DRAINING TYPE.
2. HYDRANTS ARE TO BE SUPPLIED FROM THE MANUFACTURER WITH A SILVER PRIMER.
3. HOSE BIBS TO BE AMERICAN STANDARD THREADS.
4. RESTRAINED JOINTS REQUIRED. THRUST BLOCKS ARE NOT PERMITTED.
5. ADJUSTABLE TRENCH ADAPTOR ASSY. REQUIRED FOR ALL VALVES GREATER THAN 3' DEEP.
6. INSTALL AT SIDE LOT LINES OR AT CORNERS OF ROADWAY RIGHT-OF-WAY INTERSECTIONS (TYPICAL).
7. INSTALL AT 500' RADIUS OF COVERAGE.
8. REFLECTIVE PAVEMENT MARKER INSTALLED 3' INTO PAVEMENT (TYPICAL).
9. FIRE HYDRANT TESTING SHALL BE FLOWED THRU THE 2 1/2" OPENINGS. TEST RESULTS SHALL BE ACTUAL, NOT ESTIMATED. FLOW TESTING SHALL BE SUBMITTED TO THE CITY AS LISTED.
   ACTUAL GPM ___
   STATIC ___ PSI
   RESIDUAL ___ PSI
   THE CITY WILL DETERMINE THE COLOR OF THE BONNET.
10. FIRE HYDRANT BODY SHALL BE PAINTED COLOR 151 OSHA YELLOW PRIOR TO ACCEPTANCE BY THE CITY.

REFLECTIVE
PAVEMENT MARKER

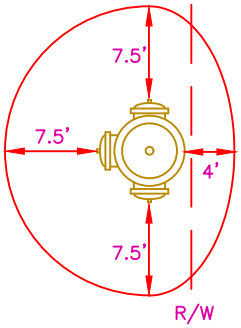

MIN. HORIZONTAL
CLEARANCE REQUIRED

PLAN VIEW OF HYDRANT LOCATION

RETURN TO TOC

THE CITY OF DAYTONA BEACH
UTILITIES DEPARTMENT

FIRE HYDRANT
ASSEMBLY
DETAIL
W-18

FY-15/16	
Drawing Date:	01/08
Drawn By:	KLH
Checked By:	JMP
Scale:	NTS
Revision Date:	
File Name: Fire Hydrant Assem W-18	
Page 22	

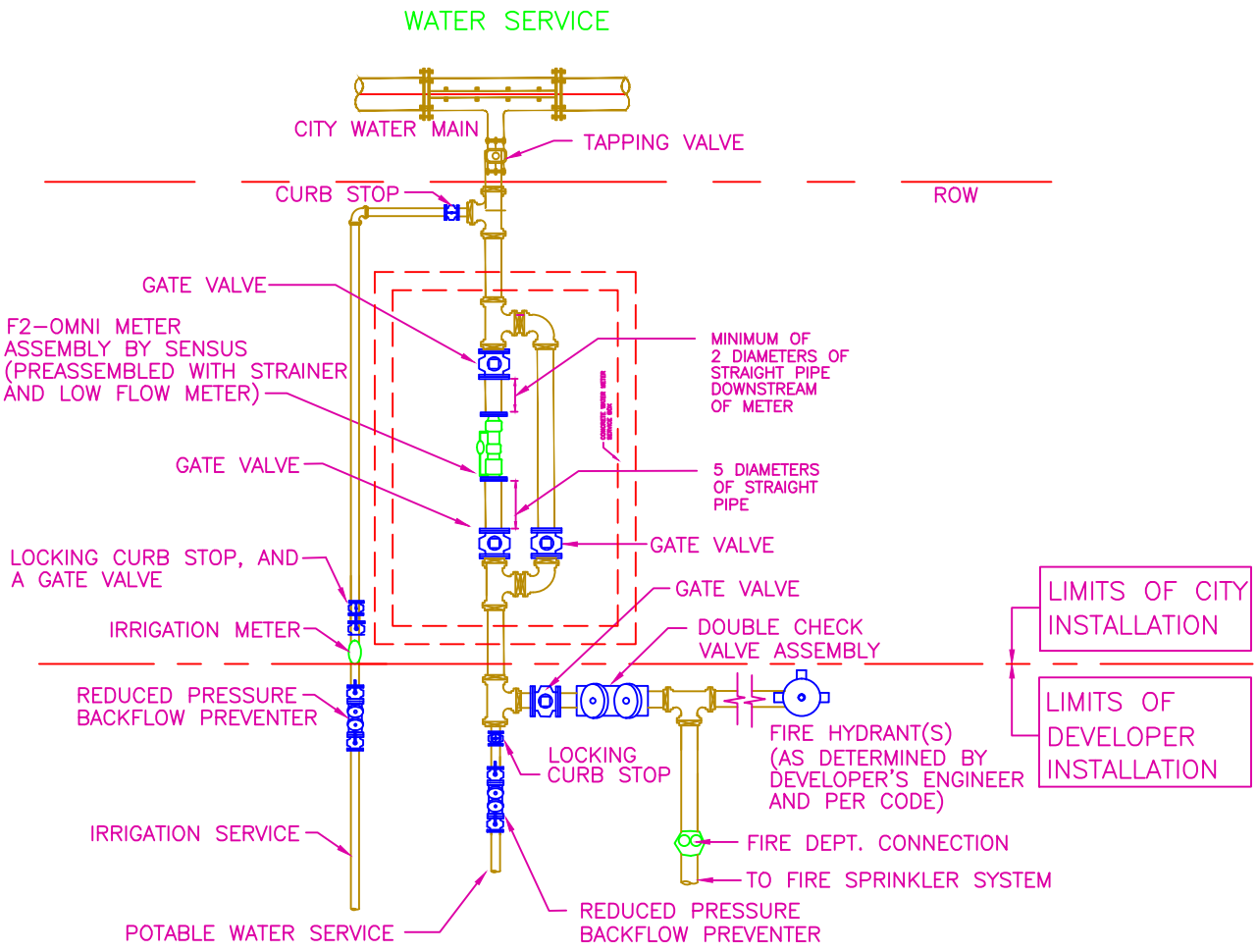

NOTEs:

1. IT SHALL BE THE RESPONSIBILITY OF THE DEVELOPER'S ENGINEER TO DETERMINE THE APPROPRIATE SIZE OF THE SERVICE CONNECTION AND TO COORDINATE THE LOCATION OF THE FIRE DEPARTMENT CONNECTION W/CITY FIRE DEPARTMENT PERSONNEL.
2. CONTRACTOR IS RESPONSIBLE FOR UNCOVERING THE WATERMAIN, INSTALLING THE TAPPING SADDLE/TAPPING VALVE & BOX (ON ANY SERVICE LARGER THAN 2"), ANY RESTORATION ACTIVITIES TO FDOT, COUNTY, OR CITY STANDARDS; ASSOCIATED MOT, AND ALL WORK BEHIND THE WATER METER. THE CITY WILL TAP THE MAIN, INSTALL THE SERVICE AND SET THE METER.

RETURN TO TOC

THE CITY OF DAYTONA BEACH
UTILITIES DEPARTMENT

FIRE/DOMESTIC/IRRIGATION CONNECTION DETAIL
W-19

FY: 15/16	
Drawing Date: 01/08	
Drawn By: KLH	
Checked By: JMP	
Scale: NTS	
Revision Date: 03/2014	
File Name: Fire-Domestic-Irr Connect W-19	
Page 23	

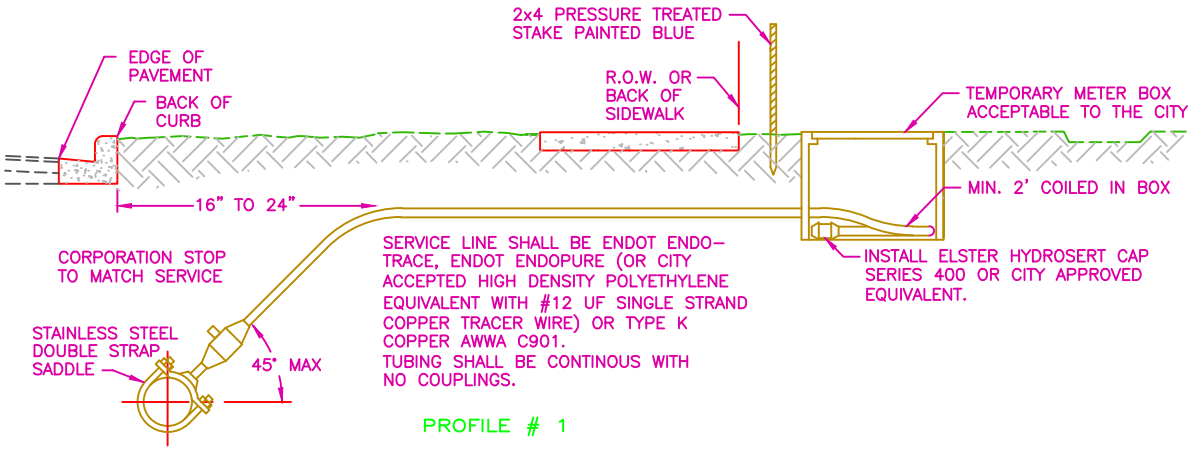

PROFILE # 1

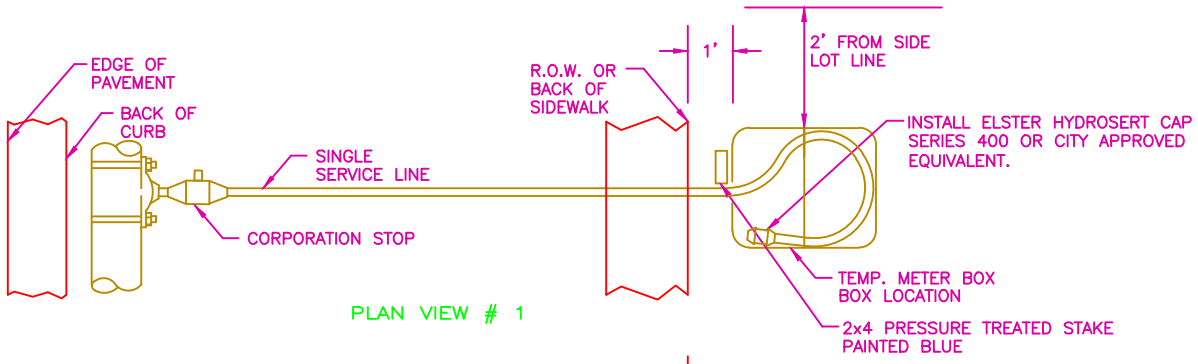

PLAN VIEW # 1

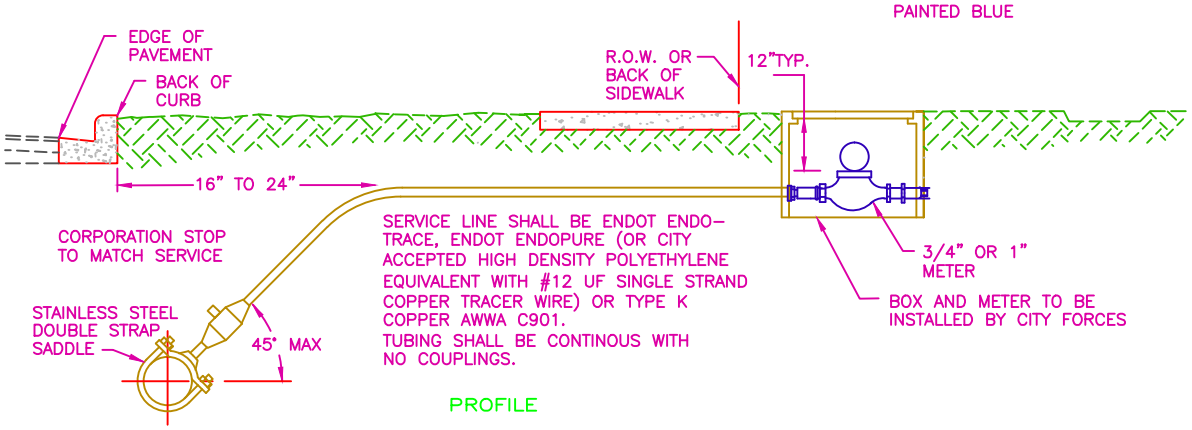

PROFILE

NOTES:

1. METER AND METER BOX SHALL BE FURNISHED BY CITY FORCES, AFTER WATER SERVICE CONNECTION HAS BEEN REQUESTED AND FEE'S HAVE BEEN PAID.
2. METER SHALL BE INSTALLED BEHIND SIDEWALK OR R.O.W. AS SHOWN.
3. BACKFLOW PREVENTION DEVICES (REDUCED PRESSURE ZONE) MAY BE REQUIRED ON WATER CONNECTIONS. THEY ARE TO BE SUPPLIED AND INSTALLED BY THE DEVELOPER/BUILDER, AT NO COST TO THE CITY. TO BE INSTALLED ON THE CUSTOMER'S SIDE OF THE METER.
4. IRRIGATION METERS REQUIRE AN APPROVED BACKFLOW PREVENTER.
5. ACCEPTABLE MANUFACTURERS: SEE CODB'S APPROVED PRODUCT LIST.
6. SERVICE SADDLES SHALL BE STAINLESS STEEL STRAPS-EPOXY COATED. ACCEPTABLE MANUFACTURERS INCLUDE: SMITH BLAIR (ROCKWELL), JCM, FORD OR APPROVED EQUAL.
7. ALL METER LOCATIONS ON COMMERICAL SITES SHALL BE LOCATED AS SHOWN ON THE CITY APPROVED SITE PLAN AND FIELD VERIFIED HORIZONTALLY & VERTICALLY BY THE OWNER OR OWNER'S REPRESENTATIVE.
8. CONTRACTOR IS TO SUPPLY METER BOXES AS SHOWN IN PROFILE #1 AND PLAN VIEW #1 WHEN BUILDING A SUBDIVISION TYPE DEVELOPMENT, WHERE THERE WILL BE A SERVICE OR SERVICES THAT WILL NOT REQUIRE A WATER CONNECTION AS SOON AS THE WATER LINE HAS BEEN INSTALLED, PRESSURED TESTED, CHLORINATED AND CLEARED FOR USE.

RETURN TO TOC

THE CITY OF DAYTONA BEACH
UTILITIES DEPARTMENT

WATER SERVICE CONNECTION
(PAGE 1 OF 2)
W-20

FY-15/16	
Drawing Date:	01/08
Drawn By:	KLH
Checked By:	JMP
Scale:	NTS
Revision Date:	12/13
File Name:	Service Connect W-20
Page	24

THE CITY OF DAYTONA BEACH

UTILITIES DEPARTMENT

WATER SERVICE CONNECTION (UNDER ROAD) (PAGE 2 OF 2)

W-21

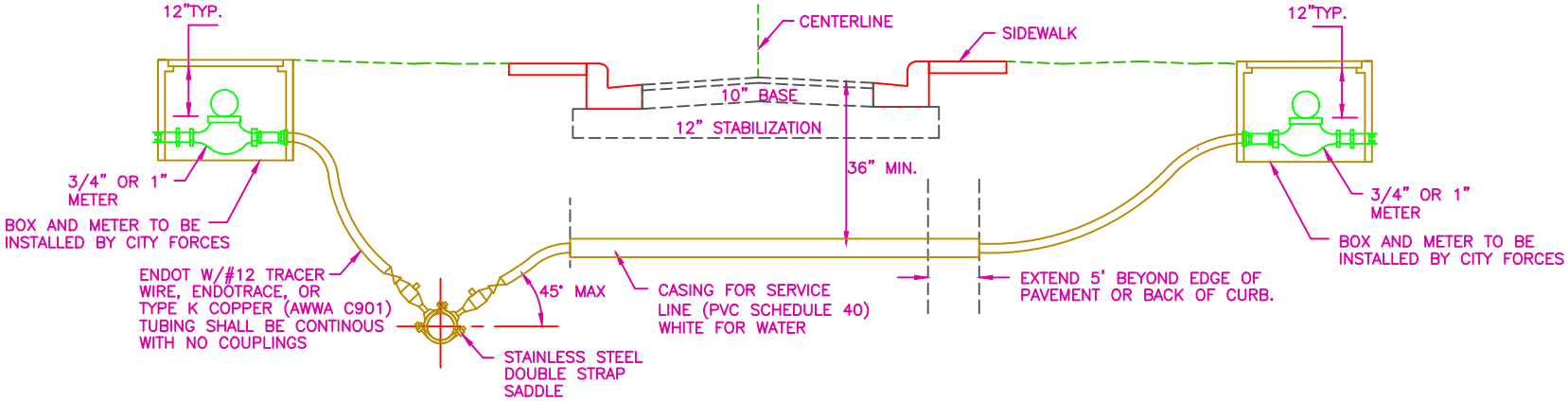

NOTES:

1. SERVICE BOX AND METER TO BE FURNISHED BY THE CITY.
2. METER SHALL BE INSTALLED 1' BEHIND THE R/W.
3. MINIMUM SEPARATION BETWEEN CURB AND METER BOX AND BETWEEN METER BOX AND SIDEWALK.
4. CONTRACTOR TO LOCATE CURB STOP BY PLACING A STAKE (2"X2" SQUARE AT 24" ABOVE GROUND) TOP PAINTED WITH THE COLOR OF THE UTILITY SERVICE AND WITH THE LOT NUMBERS IT SERVES.
5. MINIMUM RESIDENTIAL DOMESTIC METER SHALL BE 3/4".
6. ALL COMMERCIAL PROPERTIES METERS MUST BE SIZED BY THE ENGINEER-OF-RECORD.
7. THE MINIMUM INSIDE CASING DIAMETER SHALL BE 2". FOR SERVICE LINES GREATER THAN 3/4" INSIDE DIAMETER, THE CASING SHALL BE TWICE THE SIZE OF THE SERVICE LINE OUTSIDE DIAMETER.
8. INSTALL A #12 UF SINGLE STRAND COPPER TRACER WIRE ALONG ALL NON-METALLIC SERVICE LINES.

FY-15/16	
Drawing Date: 01/08	
Drawn By: KLH	
Checked By: JMP	
Scale: NTS	
Revision Date: 04/13	
File Name: Service Connect Under Road W-21	

RETURN TO TOC

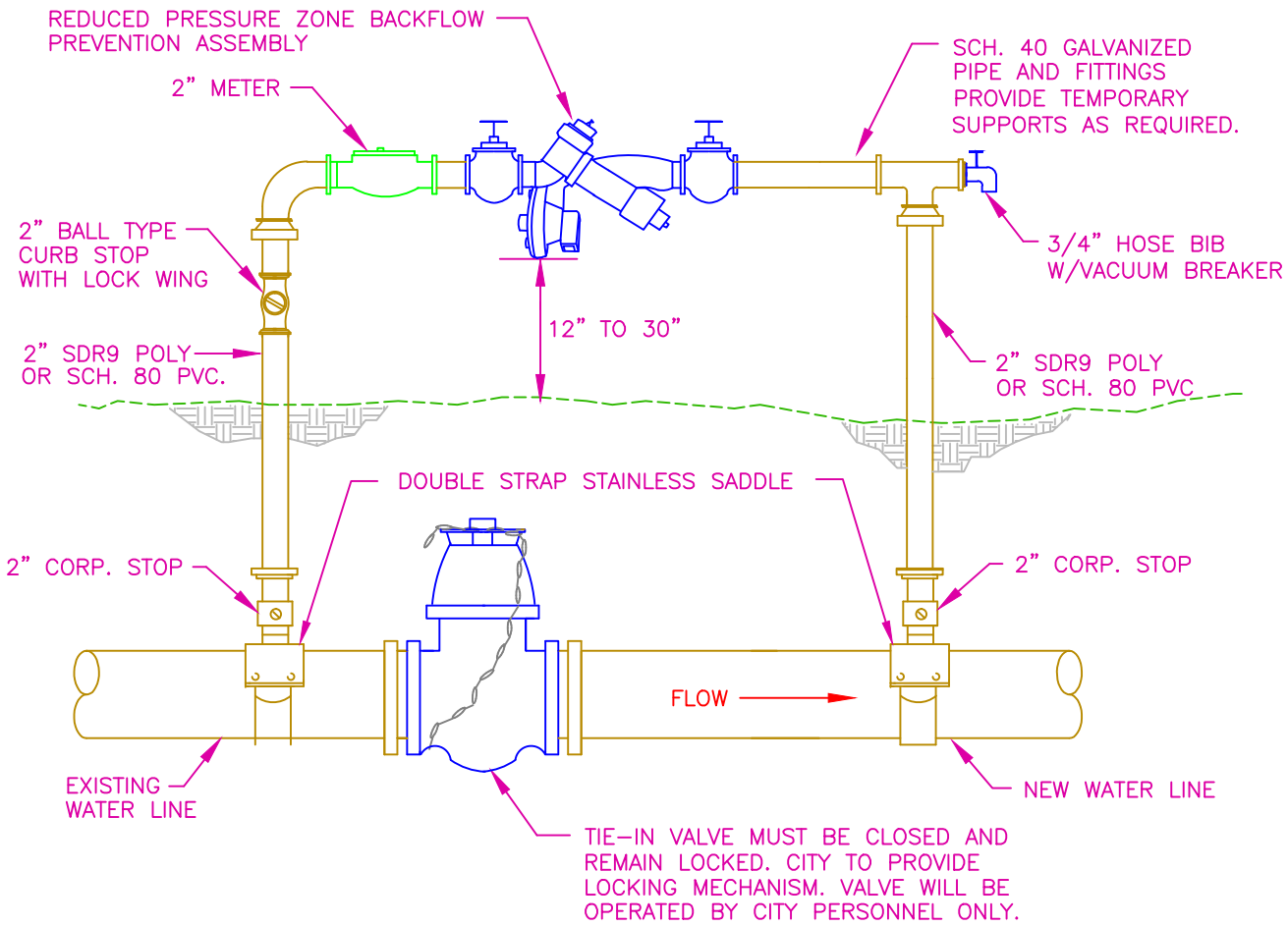

PROFILE VIEW

NTS

NOTES:

1. OPTION TWO IF FIRE HYDRANT IS UNAVAILABLE.
2. PROVIDE SUPPORT, HIGH VISIBILITY CONSTRUCTION FENCING AND/OR PROTECTIVE MEASURES TO PREVENT ABOVE GROUND PIPE BEING BROKEN.
3. REMOVE TEMPORARY BY-PASS PRIOR TO PLACING LINE IN SERVICE.

RETURN TO TOC

THE CITY OF DAYTONA BEACH
UTILITIES DEPARTMENT

TEMPORARY FILL CONNECTION DETAIL
W-22

FY-15/16	
Drawing Date:	01/08
Drawn By:	KLH
Checked By:	JMP
Scale:	NTS
Revision Date:	12/12
File Name:	Temp Fill Connect W-22
Page	26

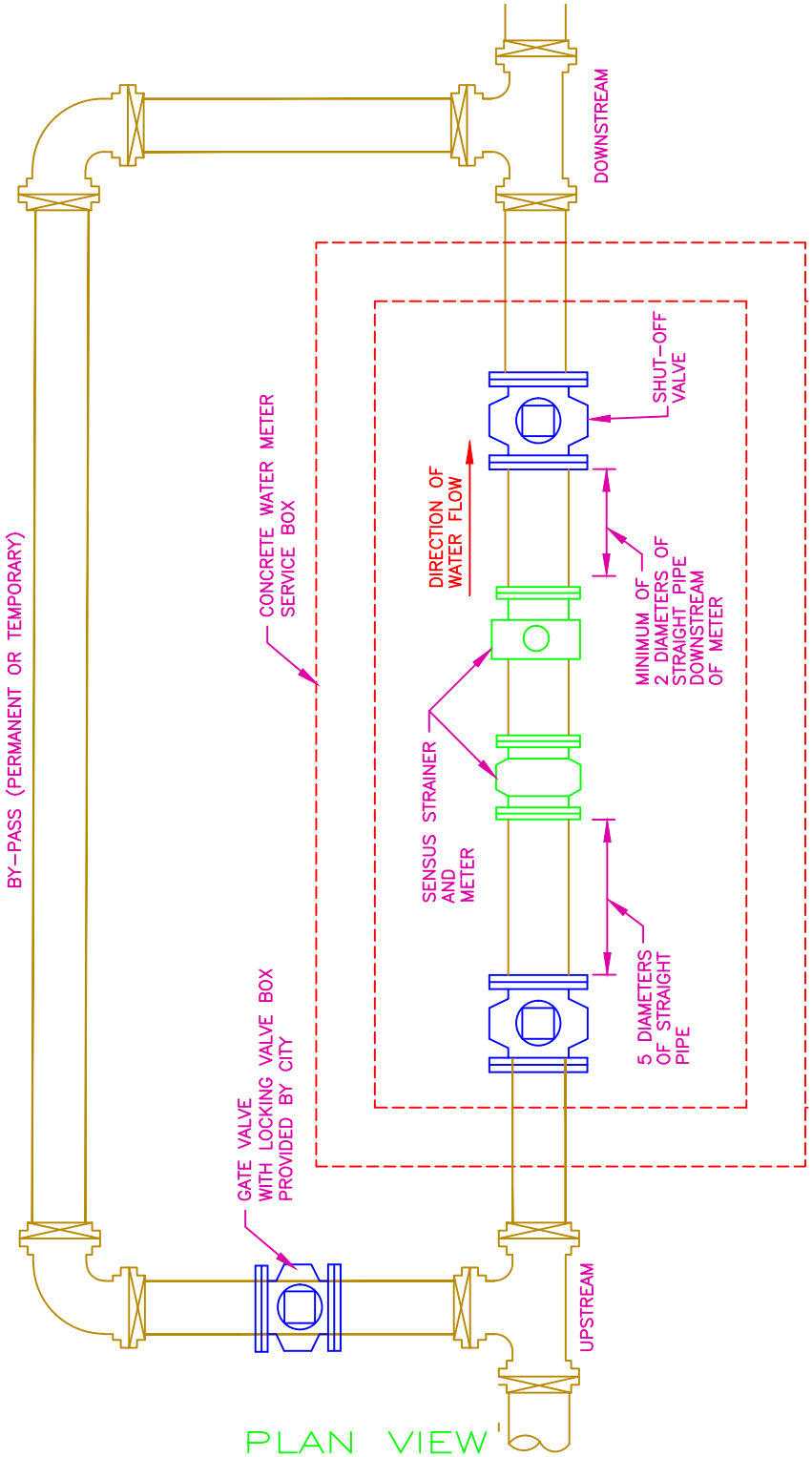

PLAN VIEW

NTS

NOTES:

A METER MUST BE INSTALLED ON ALL PERMANENT OR TEMPORARY BY-PASS LINES.

RETURN TO TOC

THE CITY OF DAYTONA BEACH
UTILITIES DEPARTMENT

MASTER WATER METER ASSEMBLY W/ BYPASS DETAIL
W-23

FY-15/16	
Drawing Date: 01/08	
Drawn By: KLH	
Checked By: JMP	
Scale: NTS	
Revision Date: 12/12	
File Name: Water Meter Assem with Bypass W-23	
Page 27	

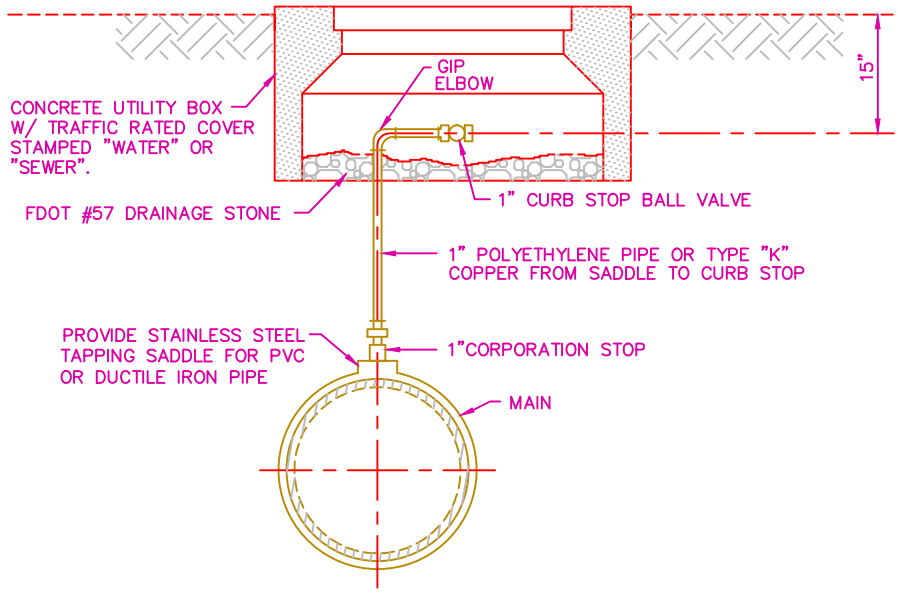

TYPE 'A' CROSS SECTIONAL VIEW

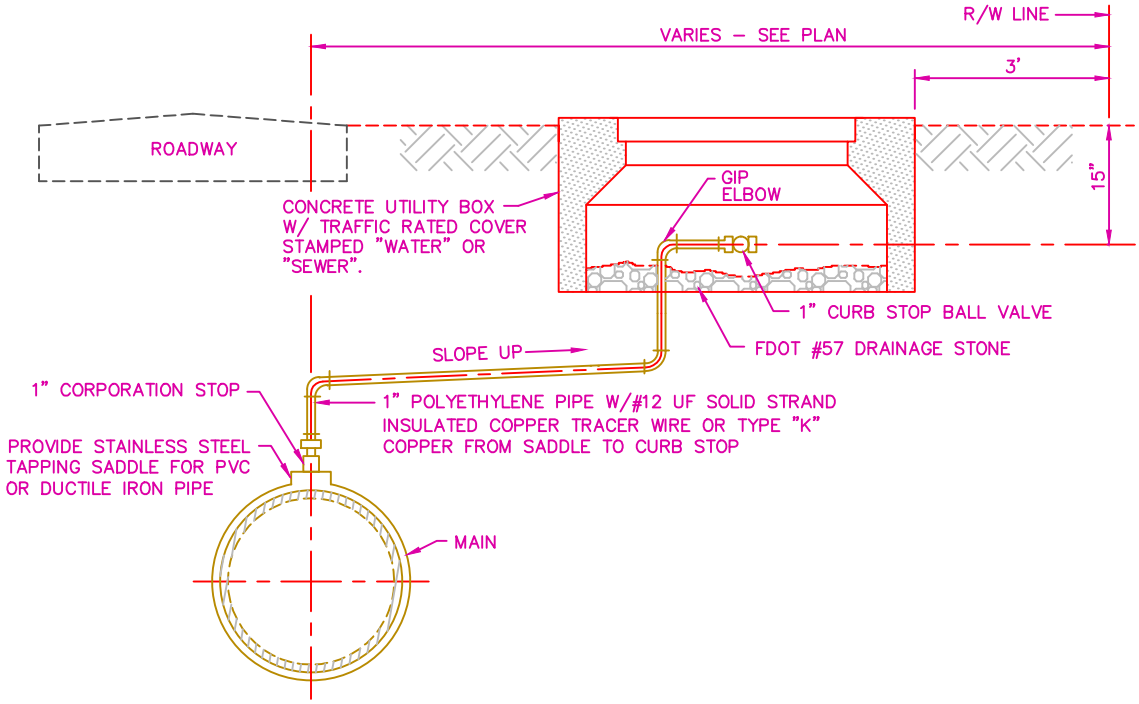

TYPE 'B' CROSS SECTIONAL VIEW

NOTES:

ACCEPTABLE MANUFACTURERS: (SEE CODB'S APPROVED PRODUCT LIST)

RETURN TO TOC

THE CITY OF DAYTONA BEACH
UTILITIES DEPARTMENT

MANUAL AIR RELEASE VALVE DETAIL
W-24

FY-15/16	
Drawing Date:	01/08
Drawn By:	KLH
Checked By:	JMP
Scale:	NTS
Revision Date:	12/12
File Name: Manual Air Release Valve W-24	
Page 28	

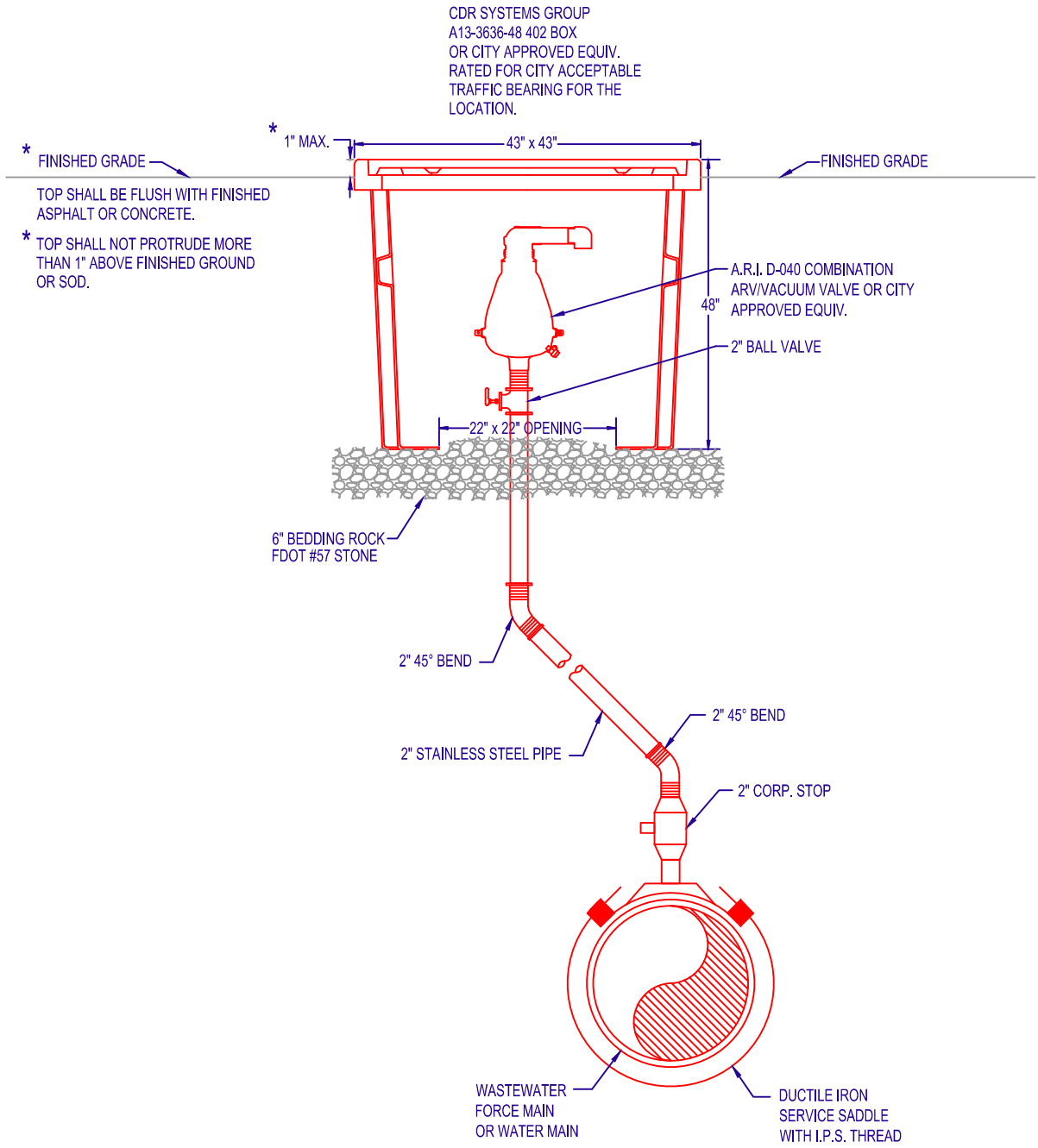

NOTES:

1. VALVES SHALL BE CENTERED IN THE BOX
2. ROCK SHALL BE COMPACTED TO A FIRM AND UNYIELDING CONDITION
3. PIPING BETWEEN THE VALVE AND MAIN SHALL BE CONFIGURED TO BEST FIT FOR THE SITE CONDITION AS APPROVED BY THE CITY
4. TOP OF BOX ON SANITARY FORCE MAIN SHALL BE CLEARLY PERMANENTLY LABELED AS SANITARY FM.
5. TOP OF ALL BOXES SHALL BE CLEARLY AND PERMANANTLY LABELED AS TO VALVE TYPE (AIR RELEASE, VACUUM, OR AIR/VAC COMBINATION).

RETURN TO TOC

THE CITY OF DAYTONA BEACH
UTILITIES DEPARTMENT

AUTOMATIC ARV/VACUUM VALVE DETAIL

W-25

FY-15/16	
Drawing Date:	12/10
Drawn By:	KLH
Checked By:	JMP
Scale:	NTS
Revision Date:	12/12
File Name:	Auto Vacuum Valve W-25
Page	29

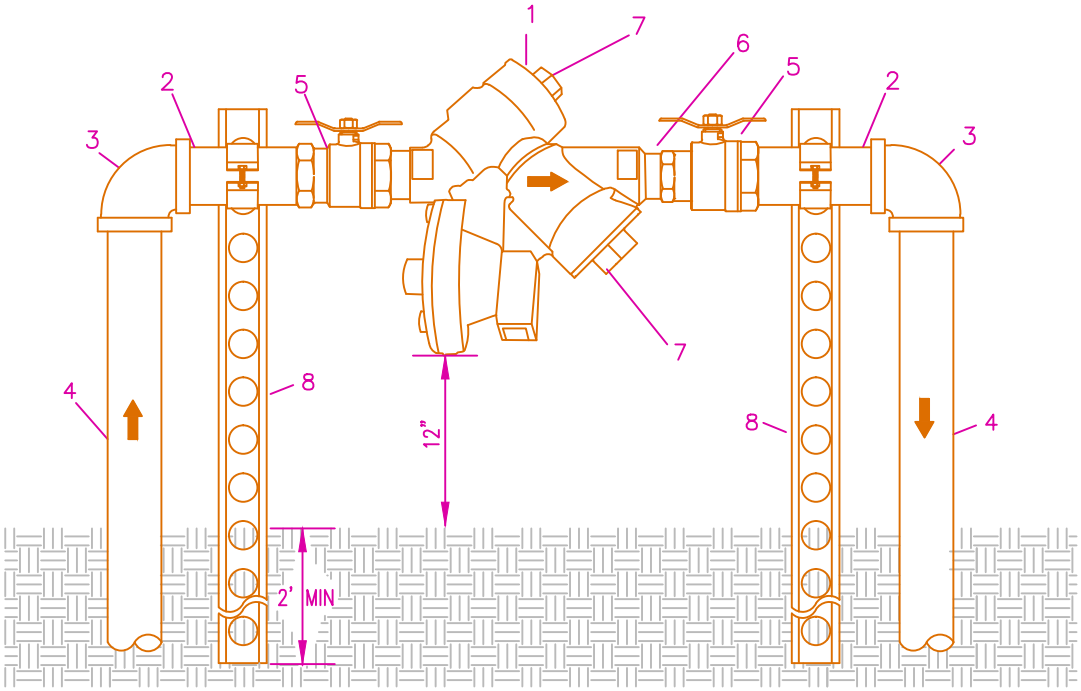

NTS

MATERIALS		
ITEM	QUANT.	DESCRIPTION
1	1	BACKFLOW PREVENTER ASSEMBLY
2	2	NOM. NIPPLES – BRASS
3	2	90° ELBOWS – GALV. OR PVC (SCH 80)
4	2	VARIES RISER – GALV.
5	2	BALL VALVE
6	1	UNION
7	*	TEST PORTS (SEE NOTES)
8	2	SS BRACKETS W/SS CLAMPS

NOTES:

1. ACCEPTABLE MANUFACTURERS: (SEE CODB'S ACCEPTABLE PRODUCT LIST)
2. FIELD ADJUST AND CUT ITEM 4 TO THE PROPER LENGTH.
3. THE RISER & ELBOW TO BE PAINTED 136 OSHA RED FOR COMMERCIAL FIRE SERVICE, 137 OSHA BLUE FOR COMMERCIAL DOMESTIC SERVICE.
4. TEST PORTS (QUANTITY/LOCATIONS DEPENDING ON MANUFACTURER)
5. PVC PIPE REQUIRES SS BRACKETS W/SS CLAMPS

RETURN TO TOC

THE CITY OF DAYTONA BEACH
UTILITIES DEPARTMENT

REDUCED PRESSURE ZONE BACKFLOW PREVENTER, SINGLE SERVICE
3/4",1",1-1/2" or 2"
(PAGE 1 OF 3)
W-26

FY-15/16
Drawing Date: 01/08
Drawn By: KLH
Checked By: JMP
Scale: NTS
Revision Date: 07/10
File Name: Backflow Preventer Small W-26

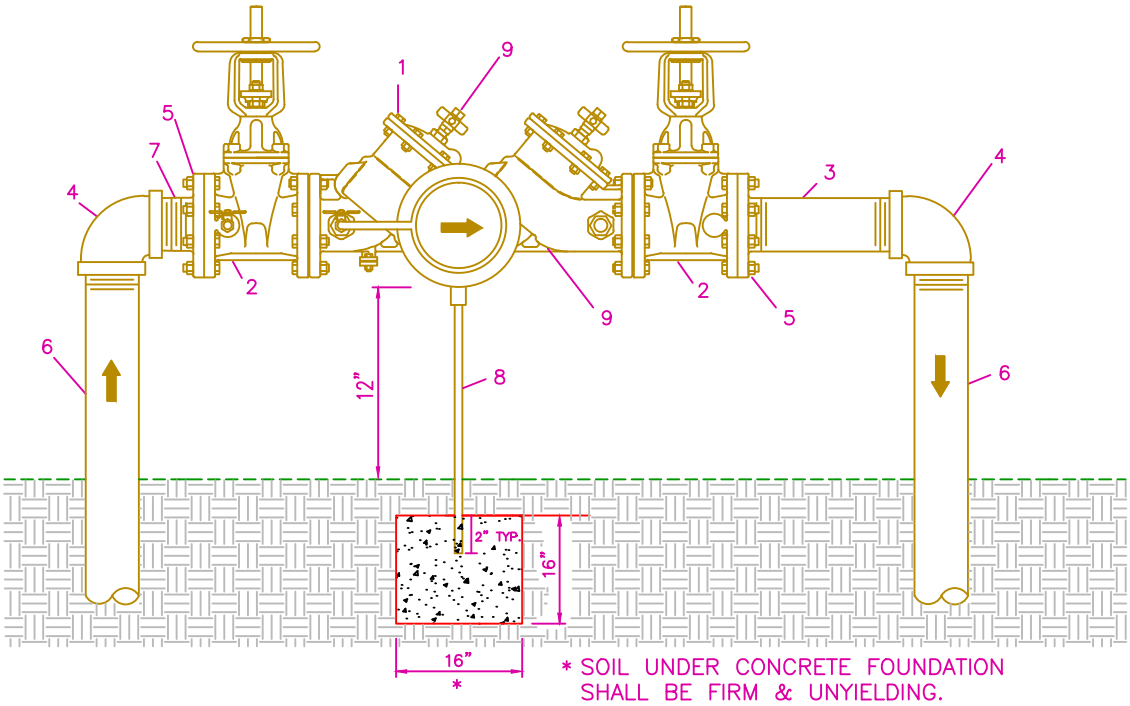

NTS

MATERIALS		
ITEM	QUANT.	DESCRIPTION
1	1	VALVE, REDUCED PRESSURE BACKFLOW PREVENTER
2	2	VALVE, GATE, C.I., F–F
3	1	NIPPLE, GALV. (12" LONG) (OPT.)
4	2	ELBOW, GALV. – 90°
5	2	FLANGE, STEEL PIPE, SCREW–TYPE
6	2	RISER, GALV. (42" LONG)
7	1	NIPPLE, GALV. (6" LONG)
8	1	SEE NOTES
9	*	SEE NOTES

NOTES:

1. ACCEPTABLE MANUFACTURERS: (SEE ACCEPTABLE PRODUCTS LIST)
2. FIELD ADJUST AND CUT ITEM 6 & ITEM 8 (PIPE SUPPORT) TO THE PROPER LENGTH.
3. THE RISER & ELBOW TO BE PAINTED 136 OSHA RED FOR COMMERCIAL FIRE SERVICE, 137 OSHA BLUE FOR COMMERCIAL DOMESTIC SERVICE, AND PANTONE PURPLE FOR COMMERCIAL RECLAIMED WATER SERVICE.
4. ITEM 8: 2" GALV. IRON PIPE/CONCRETE FOUNDATION (16"x16"x16" MIN.)
5. ITEM 9: TEST PORTS (QUANTITY/LOCATIONS DEPENDING ON MANUFACTURER)

RETURN TO TOC

THE CITY OF DAYTONA BEACH
UTILITIES DEPARTMENT

REDUCED PRESSURE ZONE BACKFLOW PREVENTER SINGLE SERVICE, 3" or 4" (PAGE 2 OF 3)
W–27

FY–15/16	
Drawing Date:	01/08
Drawn By:	KLH
Checked By:	JMP
Scale:	NTS
Revision Date:	
File Name: Backflow Preventer Med W–27	
Page 31	

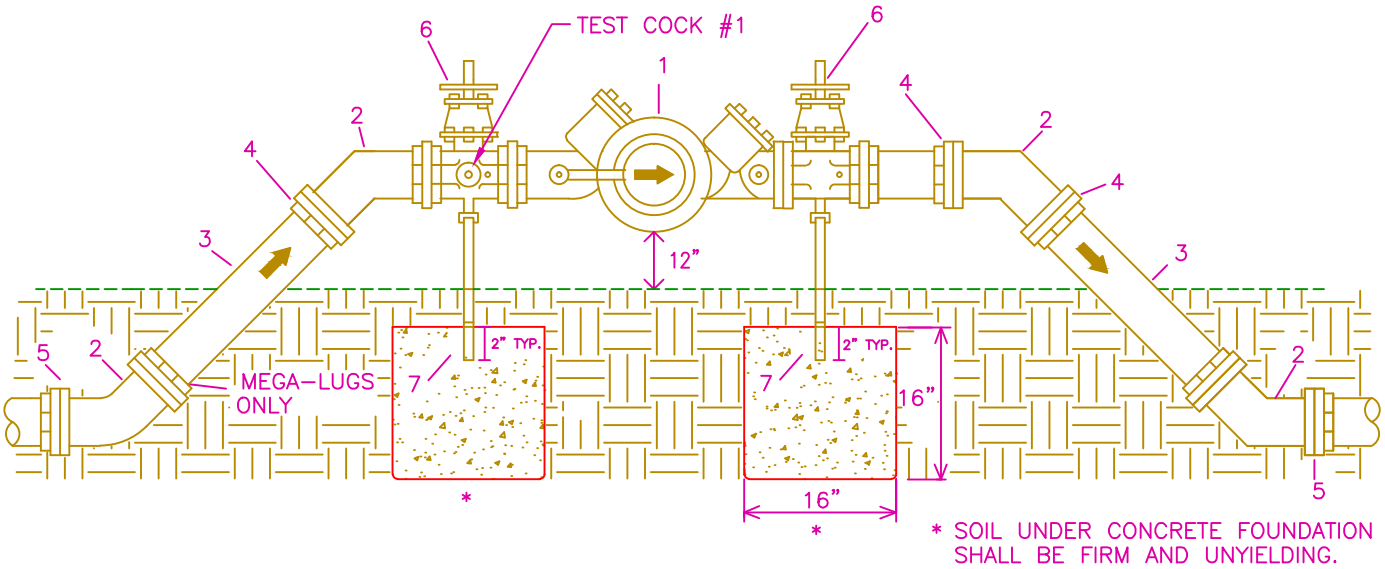

NTS

MATERIALS		
ITEM	QUANT.	DESCRIPTION
1	1	VALVE, REDUCED PRESSURE PRINCIPLE
2	4	ELBOW -45°
3	2	D.I.P. RISER PIPE
4	3	ADAPTER FLANGE D.I.P.
5	2	ADAPTER FLANGE D.I.P.
6	2	VALVE, GATE, C.I., F-F
7	SEE NOTES	

NOTES:

1. ACCEPTABLE MANUFACTURERS: (SEE CODB'S ACCEPTABLE PRODUCT LIST)
2. FIELD ADJUST AND CUT ITEM 3 & ITEM 7 (PIPE SUPPORT) TO THE PROPER LENGTH.
3. THE RISER & ELBOW TO BE PAINTED 136 OSHA RED FOR COMMERCIAL FIRE SERVICE, 137 OSHA BLUE FOR COMMERCIAL DOMESTIC SERVICE.
4. 2" GALV. IRON PIPE/CONCRETE FOUNDATION (16"x16"x16" MIN.)
5. TEST PORTS (QUANTITY/LOCATIONS DEPENDING ON MANUFACTURER)

RETURN TO TOC

THE CITY OF DAYTONA BEACH
UTILITIES DEPARTMENT

REDUCED PRESSURE ZONE BACKFLOW PREVENTER, SINGLE SERVICE, 6" or 8"
(PAGE 3 OF 3)
W-28

FY-15/16	
Drawing Date:	01/08
Drawn By:	KLH
Checked By:	JMP
Scale:	NTS
Revision Date:	
File Name: Backflow Preventer Large W-28	
Page 32	

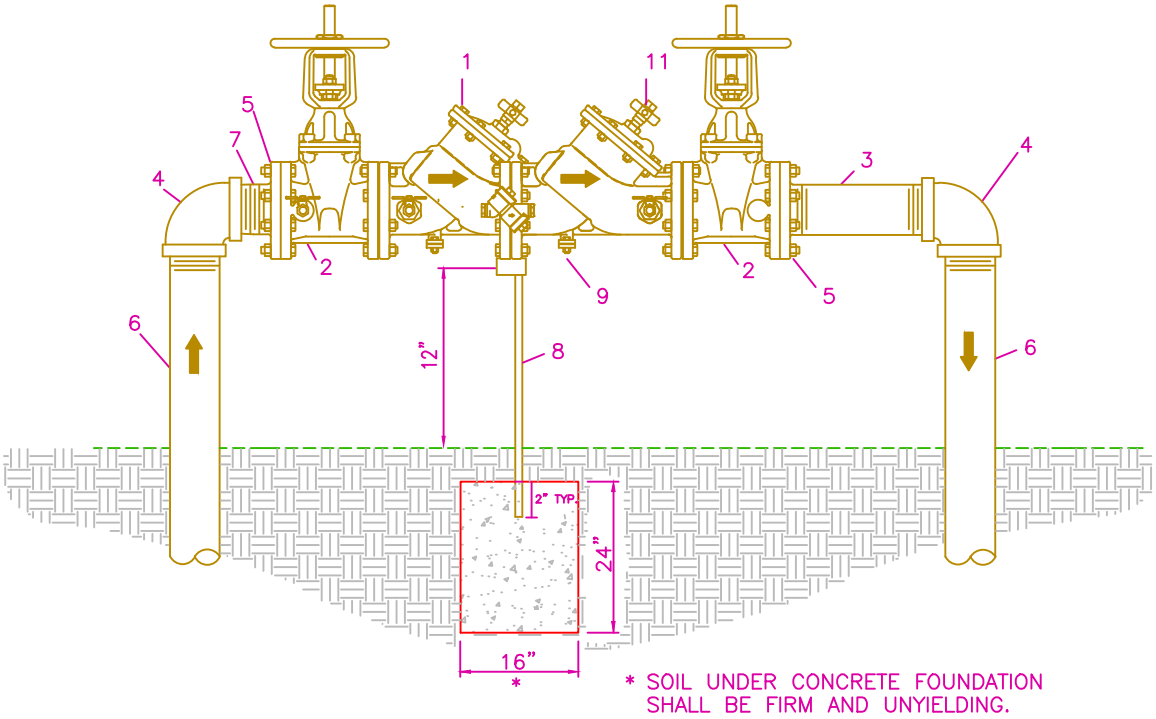

NTS

MATERIALS		
ITEM	QUANT.	DESCRIPTION
1	1	VALVE, DOUBLE CHECK BACKFLOW PREVENTER
2	2	VALVE, GATE, C.I., F–F
3	1	NIPPLE (2" TO 3" GALV.) (DIP FOR ALL OTHER SIZES) (12" LONG) (OPT.)
4	2	ELBOW 90° (2" TO 3" GALV.) (DIP FOR ALL OTHER SIZES)
5	2	FLANGE, STEEL PIPE, SCREW–TYPE
6	2	RISER, (2" TO 3" GALV.) (DIP FOR ALL OTHER SIZES) (42" LONG)
7	1	NIPPLE (2" TO 3" GALV.) (DIP FOR ALL OTHER SIZES) (6" LONG)
8	1	SEE NOTES
9	*	SEE NOTES

NOTE:
1. ACCEPTABLE MANUFACTURERS: (SEE CODB'S ACCEPTABLE PRODUCT LIST)
2. FIELD ADJUST AND CUT ITEM 6 & ITEM 8 (PIPE SUPPORT) TO THE PROPER LENGTH.
3. BFP 4" AND GREATER SHALL BE DIP. BELOW 4" SHALL BE GALV.
4. THE RISER & ELBOW TO BE PAINTED 136 OSHA RED FOR COMMERCIAL FIRE SERVICE, 137 OSHA BLUE FOR COMMERCIAL DOMESTIC SERVICE, AND PANTONE PURPLE FOR COMMERCIAL RECLAIMED WATER SERVICE.
5. (ITEM 8) 2" GALV. IRON PIPE/CONCRETE FOUNDATION (16"x16"x24" MIN.)
6. (ITEM 9) TEST PORTS (QUANTITY/LOCATIONS DEPENDING ON MANUFACTURER)

RETURN TO TOC

THE CITY OF DAYTONA BEACH
UTILITIES DEPARTMENT

DOUBLE CHECK VALVE ASSEMBLY
BACKFLOW PREVENTER LINE

W–29

FY: 15/16
Drawing Date: 01/08
Drawn By: KLH
Checked By: JMP
Scale: NTS
Revision Date:
File Name: Double Check Backflow W–29

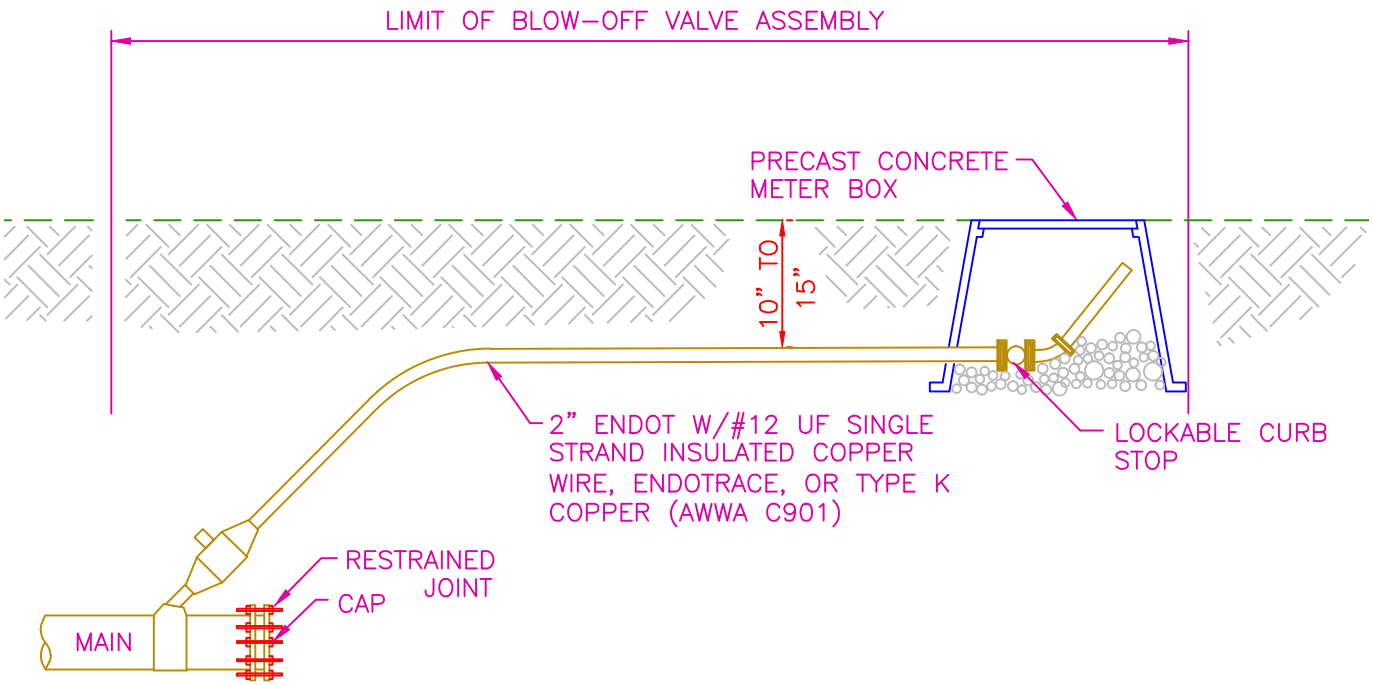

NOTE: INSTALL RESTRAINED JOINTS ON MAIN FOR MINIMUM OF 20' IN EACH DIRECTION FROM THE CORPORATION STOP.

1. ALL TEMPORARY BLOW-OFFS INSTALLED FOR SAMPLING PURPOSES MUST BE REMOVED BY CONTRACTOR.

RETURN TO TOC

THE CITY OF DAYTONA BEACH
UTILITIES DEPARTMENT

STANDARD 2" BLOW-OFF VALVE ASSEMBLY DETAIL
W-30

FY-15/16	
Drawing Date: 01/08	
Drawn By: KLH	
Checked By: JMP	
Scale: NTS	
Revision Date: 12/12	
File Name: 2 Inch Blow Off Valve W-30	
Page 34	

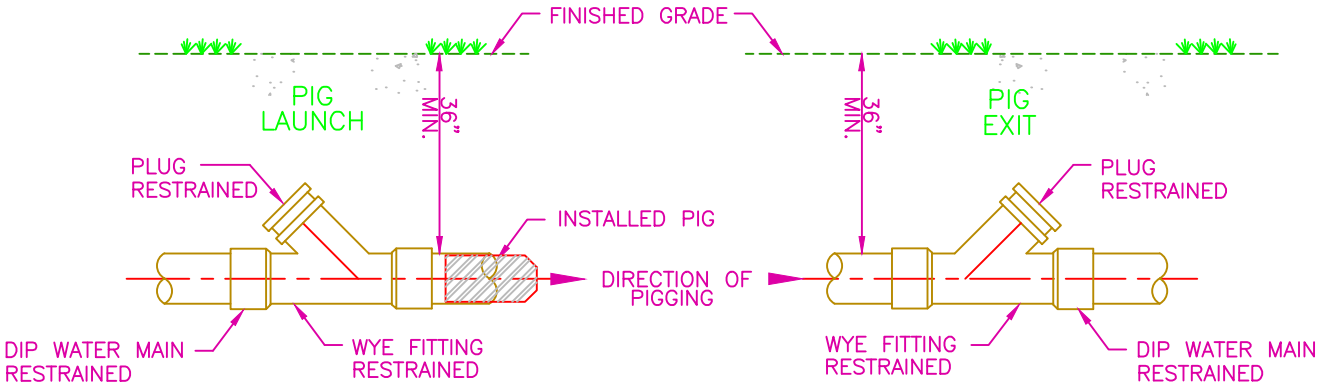

PROFILE VIEWS

NTS

RETURN TO TOC

THE CITY OF DAYTONA BEACH
UTILITIES DEPARTMENT

PIG LAUNCH AND RECEIVING DETAIL
W-31

FY: 15/16
Drawing Date: 01/08
Drawn By: KLH
Checked By: JMP
Scale: NTS
Revision Date:
File Name: Pig Launch W-31
Page 35

The City of Daytona Beach Utilities Department
List of Acceptable Products

Products that are submitted to the city engineering division prior to beginning project construction and are acceptable to the city may be substituted on a case by case basis for the products on the acceptable products list.

TABLE OF CONTENTS

Water Category 1 of 6: VALVES AND ACCESSORIES

Air Release Valves
Air Release Valves Enclosure
Blow Off Valve
Gate Valves General
Gate Valves 16-inch through 48-inch
Gate Valves 12-inch and Smaller (resilient seated only)
Sample Station (above grade)
Tapping Valves (resilient seated only)

Water Category 2 of 6: SERVICE MATERIALS

Corporation Stops (ball type)
Curb Stops Straight Valves
CTS Polyethylene Tubing
Service Saddles
U Branch
U Branch Assemblies with Angle Ball Valves

Water Category 3 of 6: PIPE MATERIALS

Casing Spacers (all sizes)
Casing End Seals
Ductile Iron / Cast Iron Cement Lined
PCCP Transmission Lines Greater than 30-inch

TABLE OF CONTENTS

Water Category 4 of 6: PIPE FITTINGS

Expansion Joints
Fittings C153 SSB / C110 Flange
Restrained Joints - Ductile Iron Pipe
Tapping Sleeves
Tapping Sleeves - Fabricated Steel

Water Category 5 of 6: HYDRANTS

Approved Hydrants

Water Category 6 of 6: REDUCED PRESSURE ZONE BACKFLOW PREVENTER

Approved RPZBP, Single Service ¾", 1", 1 ½", 2"
Approved RPZBP, Single Service 3", 4"
Approved RPZBP, Single Service 6", 8"

Water Category 1 of 6: VALVES AND ACCESSORIES

Air, Vacuum or Air/Vac Combination Release Valves

1. APCO	1. 200
2. ARI	2. ARI, D-040 / S-050 / S-010
3. Crispin	3. PL10
4. GA Industries	4. 920
5. Val-Matic	5. VM-38, VM-45

Air Release Valve Enclosure

1. Water Plus	1. No. 30 (131632) No. 40 (171730)
2. CDR	2. Boxes & Vaults
3. GlasMasters	3. Boxes & Vaults

Blow Off Valve

1. Hydro Guard	1. Automatic Blow Off
2. Kupferle Foundry Co.	2. Series TF 550
3. Water Plus	3. Series VB 2000

Gate Valves - general (resilient seat)
AWWA C509 and C515

1. American Flow Control	1. C509 and C515
2. Mueller	2. C509 and C515
3. Clow	3. C509 and C515
4. Kennedy	4. C509 and C515
5. US Pipe	5. C509 and C515
6. American AVK	6. C509 and C515
7. East Jordan Iron Works	7. C509 and C515

Gate Valves 16" - 48" (resilient seated only w/side actuators)

1. American Flow Control	1. Series 2500
2. Clow	2. Series F-6100
3. Mueller	3. Series A2361
4. US Pipe	4. Series 5460
5. Kennedy	5. Series 4571
6. M&H	6. Series 4067

Gate Valves 12" and Smaller (resilient seated only)

1. American Flow Control	1. Series 2500
2. American R/D	2. Series 2000
3. AVK	3. Series 25
4. Clow (McWane Owned)	4. Series F-6100
5. Kennedy (McWane Owned)	5. Series 4571
6. M&H (McWane Owned)	6. Series 4067
7. Mueller	7. Series A2360, 2361
8. US Pipe	8. Metroseal 250

Sample Station

1. Water Plus	1. Series 200A

Tapping Valves (resilient seated only)

1. American Flow Control	1. Series 2500
2. AVK	2. Series 25
3. Clow	3. Series F-6114
4. Kennedy	4. Series 4950
5. M&H	5. Series 4751
6. Mueller	6. T2360 & T2361
7. US Pipe	7. Metroseal 250
8. Waterous	8. Series 500

Water Category 2 of 6: SERVICE MATERIALS

Corporation Stops - Ball Type 1" & 2" (w / AWWA taper CC threads only / pack joint outlet for CTS)

1. Ford	1. FB1000
2. McDonald	2. 4701B-22
3. Mueller	3. H1500
4. Cambridge	4. 301-AB
5. James Jones	5. J-1900W

Curb Stops - Straight Valves (curb stop to be ball type, reduced port FIP x FIP ¾" x ¾")

1. Ford	1. B11-233W
2. McDonald	2. 6101W
3. Mueller	3. B20200-R
4. Cambridge	4. 224-FF
5. James Jones	5. J-1900W

Vaults, Meter Boxes & Lids - (all water meter box lids must be fabricated with an off-center hole that will accept an AMR transceiver unit.)

1. Armorcast	1. Commercial & Residential (concrete & composite)
2. CDR	2. Commercial & Residential (concrete & composite)
3. Glasmaster	3. Commercial & Residential (concrete & composite)
3. Old Castle	3. Commercial & Residential (concrete & composite)

Curb Stops - Straight Valves (ball type compression by meter, 1" & 2" CTS O.D. tubing by ⅝" x ¾" & 2" meter)

1. Ford	1. B43-342W, BFA43-777W
2. McDonald	2. 6100MW-22
3. Mueller	3. P24350, B24337, B24335
4. Cambridge	4. 242-BT, 212BMF
5. James Jones	5. J-1963W, J1975W

Curb Stops - Straight Valves (ball type compression by compression)

1. Ford	1. B44-444W, B41-233WQ - 344WQ
2. McDonald	2. 6100W-22
3. Mueller	3. P-25146
4. Cambridge	4. 224-BB
5. James Jones	5. J-1949W

Polyethylene Tubing - (blue w/ UV protection (SDR-9) 1" & 2" only)

1. Endot	1. Endot w/#14 wire
	2. Endotrace

Service Saddles - Epoxy or nylon-coated stainless steel 18-8 type 304 straps

1. Smith Blair	1. Series 393, Series 397, Series 313
2. Ford	2. Series FC202
3. JCM	3. Series 406
4. Mueller	4. DR2S, DR2SOD
5. Romac	5. Series 202NS, Series 284
6. Cambridge	6. Series 403
7. Cascade	7. CNS2

U Branch (1" x ¾" x 7 ½")

1. Ford	1. U-48-43, V-42
2. McDonald	2. 08U2M, 207 Model
3. Mueller	3. P-15363
4. Cambridge	4. 172-BM750
5. James Jones	5. J-2613

U Branch Assembly with Angle Ball Valves (1" x ¾" x 7 ½")

1. Cambridge	1. UVB-43-42W
2. McDonald	2. 09U2BW
3. Mueller	3. P-153363
4. Ford	4. 172-BM750
5. James Jones	5. J-2216

Water Category 3 of 6: PIPE MATERIALS

Casing Spacers (all sizes) Stainless steel w/ vinyl runners

1. Advanced Products	1. Series SS
2. Cascade	2. Series CCS/ CCPS/ AZ
3. BMW	3. BMW-SS
4. Power Seal	4. Model 4810
5. PSI	5. Series S-G-2
6. PSI-Ranger	6. Ranger II
7. RACI	7. S/T, F/G, P/Q, M/N, E/H

Casing End Seals

1. Advanced Products	1. Model AC & AW
2. BMW	2. BMW wrap around end seal
3. Cascade	3. Model CCES
4. Power Seal	4. Model 4810ES
5. PSI	5. Model C, S, & W

Ductile Iron/ Cast Iron Cement Lined (class 350)

1. American
2. Clow
3. Griffin
4. McWane
5. US Pipe
6. Tyton

Water Category 4 of 6: PIPE FITTINGS

Expansion Joint

1. EBAA Iron
2. Mercer
3. Metraflex
4. Proco

Fittings - C153 SSB/C110 (cement or fusion bonded epoxy lined)

1. American	1. Gradelock
2. Assured Flow Sales	
3. Griffin	
4. Nappco/Sigma	
5. Star	
6. Union/Tyler	
7. US Pipe	7. Permafuse or cement lined
8. SIP Industries	

Restrained Joints - DIP

1. American	1. Fast Grip Gasket
2. EBAA Iron Inc.	2. Mega-lug series 1100, series 1700 restraint, 2003 PV series RS-3800 restrainer
3. Ford	3. UFR-1400, 1300C series
4. Star	4. Star Grip series 3000, All Grip series 3600
5. US Pipe	5. Field Loc Gasket
6. Sigma	6. One-LOK SLD (3-36")
7. Mueller	7. Aquagrip Restraint System
8. Romac	8. Grip Rings
9. SIP Industries	9. EZ- Grips

Tapping Sleeves - Mechanical joint for all taps on cast iron, ductile iron, all taps including size on size

1. American Flow Control	1. Series 2800
2. Clow	2. Series F-5205, F-5207
3. Mueller	3. Series H-615, H-616, H-619
4. US Pipe	4. Series T-9

Tapping Sleeves - Fabricated steel, mechanical joint, fusion bonded epoxy coated

1. Smith Blair	1. Style 622, Style 623
2. JCM	2. Series 412, Series 414

Water Category 5 of 6: Hydrants

Hydrants

1. Mueller	1. A-423
2. Kennedy	2. Guardian (K-81-A, K-81-D)
3. American Flow Control	3. American Darling B84B (5 1/4" only)
4. Clow	4. Medallion (5 1/4")

Water Category 6 of 6: Reduced Pressure Zone Backflow Preventer

Approved RPZBP - Single service ¾", 1", 1 ½", 2"

1. Febco	1. 825 Y
2. Watts	2. Model 909, Model 919, Model 2009MZ
3. Conbraco/Apollo	3. 40-200
4. Wilkins	4. 975-375 XL

Approved RPZBP - Single service 3", 4"

1. Febco	1. 825 Y
2. Watts	2. Model 909 OS&Y
3. Conbraco/Apollo	3. 40-200
4. Cla-Val	4. RP-1
5. Wilkins	

Approved RPZBP - Single service 6", 8"

1. Febco	1. 825 Y
2. Watts	2. Model 909 OS&Y
3. Conbraco/Apollo	3. 40-200
4. Cla-Val	4. RP-1
5. Wilkins	

RECLAIMED WATER DETAILS

TABLE OF CONTENTS

PAGE NO.		
45	RW-1	DESIGN & CONSTRUCTION NOTES (PAGE 1 OF 3)
46	RW-2	DESIGN & CONSTRUCTION NOTES (PAGE 2 OF 3)
47	RW-3	DESIGN & CONSTRUCTION NOTES (PAGE 3 OF 3)
48	RW-4	PIPE SEPARATION DETAIL
49	RW-5	WATER MAIN SEPARATION CHART
50	RW-6	PVC & DIP RESTRAINED JOINT TABLE
51	RW-7	UTILITY PIPE CONCRETE ENCASEMENT
52	RW-8	RAILROAD CROSSING
53	RW-9	IRRIGATION (SPRINKLER) SERVICE CONNECTION (PAGE 1 OF 2)
54	RW-10	IRRIGATION SERVICE UNDER ROAD (PAGE 2 OF 2)
55	RW-11	PAVEMENT CUT AND PATCH
56	RW-12	VALVE AND VALVE BOX
57	RW-13	MAIN VALVE BOX
58	RW-14	CARSON PLASTIC VALVE BOX
59	RW-15	PIG LAUNCH & RECEIVING DETAIL
60	RW-16	RECLAIMED WATER 'IN USE' SIGN
61	RW-17	RECLAIMED WATER APPROVED PRODUCTS (PAGE 1 OF 6)
62	RW-18	RECLAIMED WATER APPROVED PRODUCTS (PAGE 2 OF 6)
63	RW-19	RECLAIMED WATER APPROVED PRODUCTS (PAGE 3 OF 6)
64	RW-20	RECLAIMED WATER APPROVED PRODUCTS (PAGE 4 OF 6)
65	RW-21	RECLAIMED WATER APPROVED PRODUCTS (PAGE 5 OF 6)
66	RW-22	RECLAIMED WATER APPROVED PRODUCTS (PAGE 6 OF 6)

RECLAIMED WATER CONSTRUCTION NOTES

1. THE CITY'S UTILITIES DEPARTMENT (671–8815) SHALL BE GIVEN A MINIMUM OF (2) TWO BUSINESS DAYS (NOT INCLUDING HOLIDAYS) PRIOR TO BEGINNING ANY RECLAIMED WATER SYSTEM CONSTRUCTION.
2. ALL DEWATERING ACTIVITIES EITHER DIRECTLY DISCHARGED OR THAT SUBSEQUENTLY USE THE CITY'S STORMWATER SYSTEM TO CONVEY GROUND OR SURFACE WATER FROM A SITE SHALL REQUIRE A STANDARD OR GENERAL USE PERMIT AS PER ARTICLE 7 SECTION 7 OF THE LAND DEVELOPMENT CODE. A PERMIT SHALL BE REQUIRED PRIOR TO ENGAGING IN ANY DEWATERING ACTIVITIES, OR IN ANY CON–STRUCTION ACTIVITIES. DEWATERING ACTIVITIES INCLUDE THE REMOVAL OF GROUND WATER FROM A CONSTRUCTION SITE, ENCLOSED VAULT, COFFERDAM, OR TRENCHES ALLOWING CONSTRUCTION OR MAIN–TENANCE TO BE DONE IN THE DRY, OR ANY ACTIVITY WHICH CHANGES THE IMPERVIOUS AREA OF LAND. SITE SPECIFIC PERMITS SHALL REQUIRE THE PAYMENT OF A PER ACRE FEE BASED ON THE SIZE OF THE DEVELOPMENT. GENERAL PURPOSE PERMITS SHALL REQUIRE THE PAYMENT OF AN ANNUAL FEE BASED ON ROUTINE SCHEDULE OF MAINTENANCE ACTIVITIES DISCHARGING DIRECTLY OR SUBSEQUENTLY INTO THE CITY'S MS4. DEWATERING PERMIT APPLICATIONS MAY BE FOUND AT http://codb.us/index.aspx?NID=262. FEES ARE SUBJECT TO ARTICLE 20 SECTION 3.1 OF THE LAND DEVELOPMENT CODE AND MUST BE SUBMITTED TO THE CITY OF DAYTONA BEACH UTILITY DEPARTMENT AT 125 BASIN STREET SUITE 130, DAYTONA BEACH FL 32114 BEFORE ANY USE OF THE MS4 WILL BE ALLOWED. FAILURE TO COMPLY WILL RESULT IN THE TERMINATION OF ACCESS TO THE CITY'S MS4 SYSTEM.
3. RECLAIMED WATER SERVICE ENDINGS SHALL BE SECURED BY WIRE TO 2" X 4" PRESSURE TREATED STAKES, APPROXIMATELY 2' ABOVE GRADE, OR MAY BE PLACED IN RECLAIMED WATER METER BOXES, PROVIDED BY THE CONTRACTOR, AT THE TIME OF FINAL SUBDIVISION INSPECTION.
4. ALL PROPOSED RECLAIMED WATER MAINS SHALL BE FLUSHED, TESTED AND CLEARED FOR SERVICE, WHEN APPROPRIATE, IN ACCORDANCE WITH THE FLORIDA DEPARTMENT OF ENVIRONMENTAL PROTECTION REQUIREMENTS. THE CONTRACTOR SHALL NOTIFY THE CITY'S DESIGNATED SITE INSPECTOR WHO SHALL COORDINATE WITH CITY PERSONNEL AT THE WASTEWATER PLANT AT LEAST (2) TWO BUSINESS DAYS PRIOR TO THE BEGINNING OF A FULL–DIAMETER FLUSH OF THE MAINS PRIOR TO THE COMMENCEMENT OF PRESSURE TESTING.
5. UPON CONSTRUCTION COMPLETION AND ACCEPTANCE OF THE SYSTEM BY THE CITY OF DAYTONA BEACH UTILITIES DEPARTMENT, IT SHALL BE THE CONTRACTOR'S RESPONSIBILITY TO SUPPLY "AS–BUILTS DRAWINGS" TO THE CITY PRIOR TO ANY USE OF THIS SYSTEM. **SEE CITY OF DAYTONA BEACH AS–BUILT REQUIREMENTS.**
6. ALL RECLAIMED WATER SERVICES SHALL BE MARKED ALONG THE OUTSIDE EDGE OF CURB WITH A "◊" OR BY METAL TABS SET INTO PAVEMENT. VALVES AND BLOW–OFFS FOR RECLAIMED WATER MAINS SHALL BE MARKED BY AN "+" SET INTO THE PAVEMENT AND PAINTED WITH PURPLE ENAMEL.
7. RECLAIMED WATER SERVICES SHALL BE LOCATED AT THE SIDE LOT LINES, ALTERNATING WITH POTABLE WATER SERVICE LOCATIONS. IN INSTANCES WHERE RECLAIMED WATER SERVICES NEED TO BE OFFSET, THESE SERVICES MAY BE OFFSET FROM THE LOT LINE A MAXIMUM DISTANCE OF 2 FEET.
8. ALL RECLAIMED WATER, HAND–OPERATED CONNECTIONS AND OUTLETS SHALL BE CONTAINED IN UNDERGROUND SERVICE VAULTS AND SHALL BE APPROPRIATELY TAGGED OR LABELED TO WARN THE PUBLIC AND EMPLOYEES THAT THE WATER IS NOT INTENDED FOR DRINKING OR SWIMMING.

NTS

9. VAULTS FOR OUTLETS SHALL BE LOCKED OR REQUIRE A SPECIAL TOOL FOR OPERATION OF OUTLETS.
10. A 75 FOOT SETBACK DISTANCE SHALL BE PROVIDED FROM PUBLIC ACCESS RECLAIMED WETTED AREAS TO ANY PUBLIC AND ANY PRIVATE POTABLE WATER SUPPLY WELLS.
11. LOW TRAJECTORY NOZZLES ARE REQUIRED WITHIN 100 FEET OF PUBLIC EATING, DRINKING OR BATHING FACILITIES.

NEXT

RETURN TO TOC

RECLAIMED WATER CONSTRUCTION NOTES
(CONT'D)

12. ANY SIGNIFICANT IRRIGATION SITE UTILIZING RECLAIMED WATER, SUCH AS AN ATHLETIC FIELD, GOLF COURSE, PARK OR POND, IS REQUIRED TO POST A 12" x 12" RECLAIMED WATER SIGN WARNING THE PUBLIC AND EMPLOYEES ITHAT RECLAIMED WATER IS NOT INTENDED FOR DRINKING OR SWIMMING. THIS SIGN SHALL BE PLACED AT THE ENTRANCE TO THE SITE AND THE LOCATION OF THE PRIVATE REUSE SYSTEM. SEE SHEET RW-16

13. DEWATERING SHALL BE PROVIDED TO KEEP GROUND WATER ELEVATION A MINIMUM OF 6 INCHES BELOW RECLAIMED WATER MAIN BEING LAID.

14. ALL RECLAIMED WATER MAINS SHALL BE LAID ON A FIRM FOUNDATION WITH ALL UNSUITABLE MATERIAL (MUCK, ROCK, COQUINA, ETC.) REMOVED AND REPLACED WITH CLEAN GRANULAR MATERIAL.

15. TRENCHES SHALL BE BACKFILLED WITH MATERIAL ACCEPTABLE TO THE CITY WITH A MINIMUM COM-PACTION OF 95% IN UNPAVED AREAS AND 98 % IN PAVED AREAS IN ACCORDANCE WITH AASHTO T-180.

16. IT SHALL BE THE CONTRACTORS RESPONSIBILITY TO ENSURE THAT TRENCH COMPACTION TESTS BE PROVIDED AT POINTS 1 FOOT ABOVE THE PIPE AND AT 1 FOOT VERTICAL INTERVALS TO FINISH GRADE, AT A MINIMUM SPACING OF EVERY 300 FEET.

17. MAXIMUM OBTAINABLE SEPARATION OF PUBLIC RECLAIMED WATER MAINS, STORM WATER SYSTEMS, POTABLE WATER AND SANITARY SEWER MAINS SHALL BE MAINTAINED. A MINIMUM HORIZONTAL SEPARATION OF SIX (6) FEET (SIDE TO SIDE). WHERE RECLAIMED WATER AND SANITARY SEWAGE MAINS CROSS WITH LESS THAN TWELVE (12) INCHES VERTICAL CLEARANCE, THE SANITARY SEWAGE MAIN SHALL BE TWENTY (20) FEET OF EITHER CONCRETE ENCASED PVC PIPE OR ENCASED IN A WATERTIGHT CARRIER PIPE, CENTERED ON THE POINT OF CROSSING (SEE PIPE SEPARATION CHART).

18. 3" METALIZED PIPE LOCATION TAPE SHALL BE LOCATED BETWEEN 15" AND 24" BELOW FINISHED GRADE OR AS SPECIFIED BY MANUFACTURER FOR ALL PVC LINES, AND UF#12 SINGLE STRAND INSULATED COPPER WIRE SHALL BE ATTACHED TO ALL PVC PIPE.

18A. UF#14 SINGLE STRAND INSULATED COPPER WIRE SHALL BE ATTACHED TO ALL PVC PIPE. WIRE RUNS SHALL BE CONNECTED WITH SILICONE FILLED WIRE CONNECTORS. EACH RUN SHALL TERMINATED AT EVERY VALVE. SEE RW-13 FOR INSTALLATION OF WIRE ON RISER PIPE. SERVICES SHALL BE CONNECTED TO THE MAIN CONNECTED TO THE MAIN WIRE WITH WIRE FILLED CONNECTORS. IT IS THE CONTRACTORS RESPONSIBLY TO ENSURE CONTINUITY AND TEST FOR CONTINUITY.

19. ALL SINGLE RESIDENTIAL WATER SERVICES SHALL BE 1". SERVICES SHALL BE CTS 3408 HIGH DENSITY POLYETHYLENE TUBING RATED FOR A MINIMUM OF 200 PSI WITH SODR 9 (CTS). THE TUBING SHALL HAVE A VIRGIN HIGH DENSITY POLYETHYLENE CENTER FOR WHICH THE MANU-FACTURER SHALL FURNISH A CERTIFICATE OF PURITY. THE TUBING SHALL BE LAVENDER IN COLOR AND SHALL HAVE THE WORDS "RECLAIMED WATER" PERMANENTLY PRINTED ON THE OUTSIDE. THE TUBING SHALL HAVE U.V. PROTECTION AND SHALL NOT BE AFFECTED BY DIRECT SUNLIGHT. THE TUBING SHALL COMPLY WITH OR EXCEED THE APPLICABLE STANDARDS OF A.S.T.M. D1248, D3350, D2239, D2737, N.S.F.-14 AND A.W.W.A. C901 AND SHALL COME WITH A LIFETIME WARRANTY. APPROVED SIZES: 1" AND 2" DIAMETERS. SEE APPROVED PRODUCT LIST FOR ACCEPTABLE MANUFACTURERS.

20. AS STANDARD PRACTICE AND IF POSSIBLE RECLAIMED WATER MAINS SHALL BE INSTALLED 4 FEET OFF THE BACK OF THE CURB ON THE OPPOSITE SIDE OF THE ROAD OF THE POTABLE WATER LINES, (NOT UNDER PROPOSED SIDEWALK LOCATION) OR AS APPROVED BY THE CITY.

21. ALL RECLAIMED WATER MAINS SHALL HAVE A MINIMUM COVER OF 36 INCHES. IN SPECIAL CASES WHERE IT IS IMPOSSIBLE OR INAPPROPRIATE TO PROVIDE ADEQUATE COVER. DUCTILE IRON PRESSURE CLASS 350 OR CONCRETE ENCASEMENT/PROTECTIVE SLAB MAY BE USED AT THE DISCRETION OF THE UTILITIES DEPARTMENT.

22. RECLAIMED WATER MAINS SHALL BE PURPLE PVC, DR-18 AWWA CLASS C-900 OR C-905, CL 150, OR DIP PRESSURE CLASS 350, STANDARD CEMENT LINED (PAINTED PURPLE) UNLESS APPROVED OTHERWISE BY THE CITY. ALL HORIZONTAL DIRECTIONAL DRILLS USING HDPE SHALL BE DR-11 WORKING PRESSURE RATING 160 OR GREATER. THE CITY MAY REQUIRE A HIGHER PRESSURE RATING DEPENDENT UPON SITE CONDITIONS.

RECLAIMED WATER CONSTRUCTION NOTES
(CONT'D)

23. RECLAIMED WATER MAINS SHALL BE PURPLE PVC, DR-18 AWWA CLASS C-900 OR C-905, CL 150, OR DIP PRESSURE CLASS 350, STANDARD CEMENT LINED (PAINTED PURPLE) UNLESS APPROVED OTHERWISE BY THE CITY. ALL HORIZONTAL DIRECTIONAL DRILLS USING HDPE SHALL BE DR-11 WORKING PRESSURE RATING 160 OR GREATER. THE CITY MAY REQUIRE A HIGHER PRESSURE RATING DEPENDENT UPON SITE CONDITIONS.
24. ALL RECLAIMED WATER MAINS SHALL USE A RESTRAINED JOINT METHOD IN COMPLIANCE WITH THE DUCTILE IRON PIPE RESEARCH ASSOCIATION (DIPRA) GUIDELINES. IN THE EVENT THAT PVC FITTINGS ARE SPECIFIED, THE RESTRAINED JOINT SHALL BE MODIFIED IN ACCORDANCE WITH THE RECOMMENDED ADDITIONAL RESTRAINED LENGTH REQUIRED FOR PIPE WRAPPED WITH POLYETHYLENE. IN NO INSTANCE SHALL THRUST BLOCKS BE PERMITTED.
25. MEGALUGS, BOLTLESS RESTRAINED JOINTS, OR GRIPPER GASKETS SHALL BE USED ON ALL RESTRAINED JOINT INSTALLATIONS. MINIMUM DEPTH OF BURY ON PIPES NOT MEETING REQUIRED COVER REQUIREMENTS SHALL FOLLOW THE MOST RECENT DIPRA RESTRAINT DESIGN GUIDELINES.
26. GRIPPER RING GASKETS BY ROMAC MAY BE USED AS APPROPRIATE FOR RESTRAINING PRESSURE PIPE TO FITTINGS, VALVES, ETC.
27. ALL RECLAIMED WATER LINES SHALL BE READILY DISTINGUISHABLE BY THEIR PURPLE COLOR OR TAPE MARKINGS. DUCTILE IRON PIPE SHALL BE WRAPPED WITH PURPLE POLYETHYLENE OR COMPLETELY PAINTED PURPLE.
28. ALL DIP PIPE SHALL HAVE 2" PURPLE STRIPES PAINTED AT 12 O'CLOCK, 3 O'CLOCK, 6 O'CLOCK AND 9 O'CLOCK FOR THE FULL LENGTH OF PIPE. PURPLE PAINT WITH EPOXY SHALL BE USED AND REUSE CLEARLY MARKED (N/A IF PIPE IS PAINTED).
29. VALVES SHALL BE PLACED AT ALL STREET INTERSECTIONS AND AT MAXIMUM SPACINGS OF 1000 FEET.
30. AT ALL RECLAIMED WATER MAIN TEES AND CROSSES, VALVES SHALL BE INSTALLED ON ALL LEGS EXCEPT ONE.
31. APPROVED WATER VALVE TYPES ARE THE FOLLOWING:
    A. RESILIENT SEAT GATE VALVES (AWWA C-509)
    B. TAPPING VALVES WITH MECHANICAL OR STAINLESS STEEL TAPPING SLEEVE.
32. ALL VALVES SHALL BE ADJUSTED TO FINISH GRADE AND THE CAPS SHALL BE PAINTED PURPLE TO MAKE THEM PLAINLY DISTINGUISHABLE.
33. THE CONTRACTOR SHALL BE REQUIRED TO PIG ALL RECLAIMED WATER MAINS EQUAL TO OR GREATER THAN 6" IN DIAMETER AND PRIMARY DISTRIBUTION MAINS LOCATED ON COLLECTOR AND ARTERIAL ROADWAYS. LAUNCHING AND EXTRACTION POINTS SHALL BE DETERMINED BY THE CONTRACTOR.
34. IN AREAS WHERE RECLAIMED WATER IS AVAILABLE, RECLAIMED WATER WILL BE UTILIZED IN THE PRESSURE TESTING OF NEW NON-POTABLE WATER LINES.
35. THE RECLAIMED WATER MAIN SHALL NOT BE PLACED IN SERVICE UNTIL A SATISFACTORY 150 PSI @ (4) FOUR HOURS PRESSURE TEST HAS PASSED AND THE RESULTS ARE FORWARDED TO THE CITY.
36. WATER UTILITIES DEPARTMENT NO LONGER DOES RECLAIMED WATER TAPS.
37. WITH RESPECT TO TIE-IN CONNECTIONS, THE CITY RESERVES THE RIGHT TO REQUIRE CONNECTIONS TO BE PERFORMED DURING PERIODS OF LOW FLOW IN ORDER TO MINIMIZE SERVICE DISRUPTION TO EXISTING CUSTOMERS.
38. FOR CONSTRUCTION PURPOSES, THE PLANS SHALL DIMENSION THE PROPOSED LOCATIONS OF ALL RECLAIMED WATER MAINS MEASURED FROM THE BACK OF CURB (EDGE OF PAVEMENT IF NO CURB EXISTS), AND THE RIGHT-OF-WAY LINE.
39. LANDSCAPE PLANS SHALL CLEARLY DEPICT THE DESIGN LOCATION OF PLANTINGS RELATIVE TO THE LOCATION OF PUBLIC UTILITIES AND STORM WATER INFRASTRUCTURE IN ORDER TO EVALUATE POTENTIAL CONFLICTS.
40. THE RECLAIMED WATER MAIN SHALL NOT BE PLACED IN SERVICE UNTIL AN APPROVED BACKFLOW PREVENTER HAS BEEN INSTALLED ON THE CUSTOMER'S POTABLE SERVICE LINE.
41. PRESSURE TESTS FOR TAPPING SADDLES AND VALVES TO BE A MINIMUM OF 30 MINUTES AT 150 PSI OR 30 MINUTES AT THE MANUFACTURER'S LABELED TESTING PRESSURE.

POTABLE WATER MAIN TO BE CENTERED ABOVE THE CROSSING MAIN FOR MAXIMUM JOINT SEPARATION.

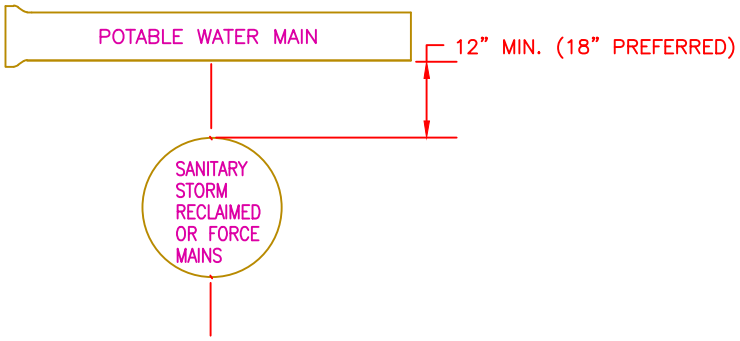

A MINIMUM HORIZONTAL SEPARATION OF 6' OUTSIDE TO OUTSIDE SHALL BE MAINTAINED BETWEEN RECLAIMED WATER LINES AND POTABLE WATER MAINS.

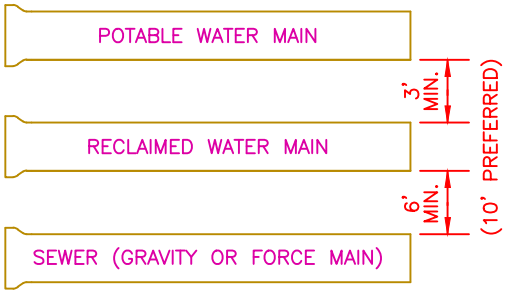

A MINIMUM HORIZONTAL SEPARATION OF 6' OUTSIDE TO OUTSIDE SHALL BE MAINTAINED BETWEEN RECLAIMED WATER LINES AND SEWER COLLECTION.

A MINIMUM HORIZONTAL SEPARATION OF 6' (OUTSIDE TO OUTSIDE), SHALL BE MAINTAINED BETWEEN SEWER COLLECTION LINES AND POTABLE WATER MAINS.

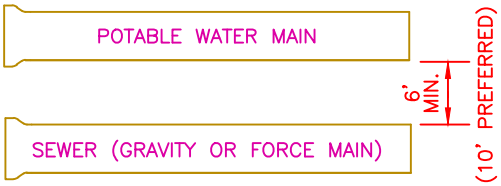

NEW OR RELOCATED UNDERGROUND WATER MAINS SHALL BE LAID TO PROVIDE A HORIZONTAL DISTANCE OF AT LEAST SIX FEET, AND PREFERABLY TEN FEET, BETWEEN THE OUTSIDE OF THE WATER MAIN AND THE OUTSIDE OF ANY EXISTING OR PROPOSED GRAVITY OR PRESSURE-TYPE SANITARY SEWER, WASTEWATER FORCE MAIN, OR PIPELINE CONVEYING RECLAIMED WATER NOT REGULATED UNDER PART III OF CHAPTER 62-610, F.A.C. THE MINIMUM HORIZONTAL SEPARATION DISTANCE BETWEEN WATER MAINS AND GRAVITY-TYPE SANITARY SEWERS SHALL BE REDUCED TO THREE FEET WHERE THE BOTTOM OF THE WATER MAIN IS LAID AT LEAST SIX INCHES ABOVE THE TOP OF THE SEWER. NEW OR RELOCATED UNDERGROUND WATER MAINS CROSSING ANY EXISTING OR PROPOSED GRAVITY OR VACUUM-TYPE SANITARY SEWER SHALL BE LAID SO THE OUTSIDE OF THE WATER MAIN IS AT LEAST TWELVE INCHES, AND PREFERABLY EIGHTEEN INCHES, ABOVE OR AT LEAST TWELVE INCHES BELOW THE OUTSIDE OF THE OTHER PIPELINE. HOWEVER, IT IS PREFERABLE TO LAY THE WATER MAIN ABOVE THE OTHER PIPELINE. NEW OR RELOCATED UNDERGROUND WATER MAINS CROSSING ANY EXISTING OR PROPOSED PRESSURE-TYPE SANITARY SEWER, WASTEWATER OR STORMWATER FORCE MAIN, OR PIPELINE CONVEYING RECLAIMED WATER SHALL BE LAID SO THE OUTSIDE OF THE WATER MAIN IS AT LEAST 12 INCHES ABOVE OR BELOW THE OUTSIDE OF THE OTHER PIPELINE AND CONDUIT. HOWEVER, IT IS PREFERABLE TO LAY THE WATER MAIN ABOVE THE OTHER PIPELINE.

AT THE UTILITY CROSSINGS DESCRIBED ABOVE, ONE FULL LENGTH OF WATER MAIN PIPE SHALL BE CENTERED ABOVE OR BELOW THE OTHER PIPELINE SO THE WATER MAIN JOINTS WILL BE AS FAR AS POSSIBLE FROM THE OTHER PIPELINE. ALTERNATIVELY, AT SUCH CROSSINGS, THE PIPES SHALL BE ARRANGED SO THAT ALL WATER MAIN JOINTS ARE AT LEAST THREE FEET FROM ALL JOINTS IN VACUUM-TYPE SANITARY SEWERS, OR PIPELINES CONVEYING RECLAIMED WATER REGULATED UNDER PART III OF CHAPTER 62-610, F.A.C., AND AT LEAST SIX FEET FROM ALL JOINTS IN GRAVITY OR PRESSURE-TYPE SANITARY SEWERS, WASTEWATER FORCE MAINS, OR PIPELINES CONVEYING RECLAIMED WATER NOT REGULATED UNDER PART III OF CHAPTER 62-610, F.A.C.

PIPE SEPARATION DETAIL

NTS

RETURN TO TOC

THE CITY OF DAYTONA BEACH
UTILITIES DEPARTMENT

PIPE SEPARATION DETAIL

RW-4

FY-15/16	
Drawing Date: 01/08	
Drawn By: KLH	
Checked By: JMP	
Scale: NTS	
Revision Date: 07/10	
File Name: Pipe Separation RW-4	
Page 48	

LOCATION OF PUBLIC WATER SYSTEM MAINS IN ACCORDANCE WITH F.A.C. RULE 62-555.314

Other Pipe	Horizontal Separation	Crossings (1)	Joint Spacing @ Crossings (Full Joint Centered)
Storm Sewer, Stormwater Force Main, Reclaimed Water (2)	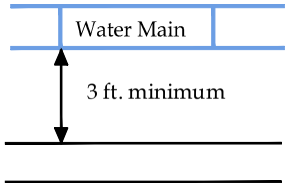	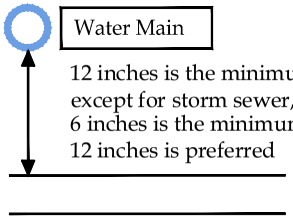	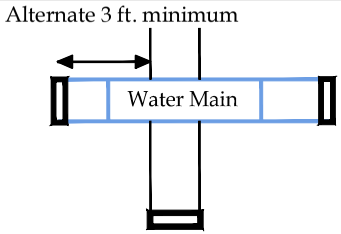
Vacuum Sanitary Sewer	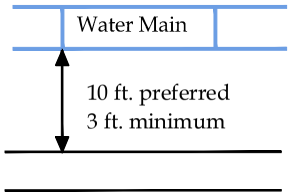	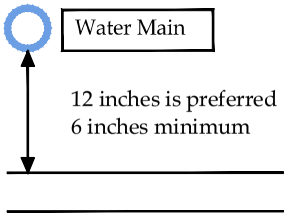	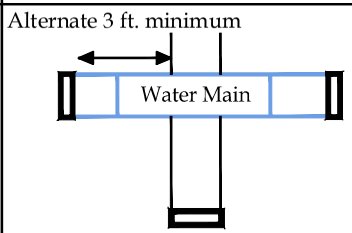
Gravity or Pressure Sanitary Sewer, Sanitary Sewer Force Main, Reclaimed Water (4)	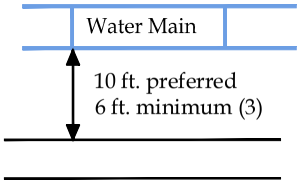	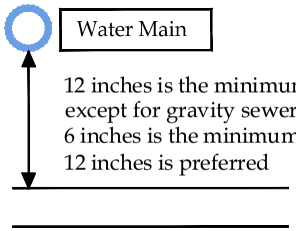	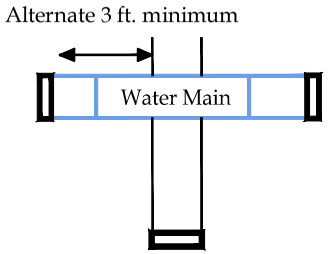
On-Site Sewage Treatment & Disposal System	10 ft. minimum	---	---

(1) Water main should cross above other pipe. When water main must be below other pipe, the minimum separation is 12 inches.
(2) Reclaimed water regulated under Part III of Chapter 62-610, F.A.C.
(3) 3 ft. for gravity sanitary sewer where the bottom of the water main is laid at least 6 inches above the top of the gravity sanitary sewer.
(4) Reclaimed water not regulated under Part III of Chapter 62-610, F.A.C.

Disclaimer - This document is provided for your convenience only. Please refer to F.A.C. Rule 62-555.314 for additional construction requirements.

RETURN TO TOC

FY-15/16
Drawing Date: 01/08
Drawn By: KLH
Checked By: JMP
Scale: NTS
Revision Date:
File Name: Water Main Separation Chart RW-5
Page 49

WATER MAIN SEPARATION CHART RW-5

THE CITY OF DAYTONA BEACH UTILITIES DEPARTMENT

SCHEDULE OF LENGTHS OF RESTRAINED PVC PIPE (FT.)					
FITTING	90° BEND	45° BEND	22.5° BEND	11.25° BEND	TEE OR DEAD END
PIPE SIZE (IN.)					
4"	20	18	18	18	45
6"	28	18	18	18	63
8"	36	18	18	18	82
10"	44	28	18	18	98
12"	51	21	18	18	116
14"	57	24	18	18	132
16"	63	26	18	18	148
18"	69	29	18	18	163
20"	75	31	18	18	179
24"	87	36	18	18	208
30"	102	42	20	18	248

LENGTHS BETWEEN HEAVY LINES INDICATE ONE FULL LENGTH (18' MIN.) OF PIPE TO BE RESTRAINED.

TABLE SHOWS MINIMUM LENGTH OF PIPE EACH WAY FROM FITTING FOR WHICH RESTRAINT IS REQUIRED.

TABLE APPLIES TO PVC PIPE FOR THE FOLLOWING CONDITIONS:

TEST PRESSURE: 150 PSIG
SOIL TYPE: SP
COVER DEPTH: 3 FEET (MIN.)
SAFETY FACTOR: 1.5
TRENCH TYPE: 2

SCHEDULE OF LENGTHS OF RESTRAINED DIP (FT.)					
FITTING	90° BEND	45° BEND	22.5° BEND	11.25° BEND	TEE OR DEAD END
PIPE SIZE (IN.)					
4"	21 (26)	18 (18)	18 (18)	18 (18)	37 (55)
6"	30 (36)	18 (18)	18 (18)	18 (18)	52 (78)
8"	38 (45)	18 (18)	18 (18)	18 (18)	67 (100)
10"	45 (54)	18 (22)	18 (18)	18 (18)	81 (122)
12"	52 (63)	22 (26)	18 (18)	18 (18)	94 (141)
14"	60 (72)	25 (30)	18 (18)	18 (18)	107 (160)
16"	66 (80)	27 (33)	18 (18)	18 (18)	120 (180)
18"	74 (87)	31 (36)	18 (18)	18 (18)	132 (198)
20"	80 (94)	33 (39)	18 (18)	18 (18)	144 (216)
24"	92 (108)	38 (45)	18 (22)	18 (18)	167 (250)
30"	106 (128)	44 (53)	21 (25)	18 (18)	199 (298)
36" *	69 (82)	28 (34)	18 (18)	18 (18)	170 (204)
42" *	76 (92)	31 (37)	18 (18)	18 (18)	191 (229)
48" *	90 (106)	40 (46)	18 (18)	18 (18)	212 (254)

LENGTHS BETWEEN HEAVY LINES INDICATE ONE FULL LENGTH (18' MIN.) OF PIPE TO BE RESTRAINED.

TABLE SHOWS MINIMUM LENGTH OF PIPE EACH WAY FROM FITTING FOR WHICH RESTRAINT IS REQUIRED.

TABLE APPLIES TO DUCTILE IRON PIPE FOR THE FOLLOWING CONDITIONS:

TEST PRESSURE: 150 PSIG
SOIL TYPE: SP
COVER DEPTH: 3 FEET (MIN.)
SAFETY FACTOR: 1.5
TRENCH TYPE: 2

VALUES IN PARENTHESIS (X) ARE FOR PIPE ENCASED IN POLYETHYLENE.

* VALUES APPLY TO DUCTILE IRON PIPE AT 50 PSI TEST PRESSURE.

RETURN TO TOC

THE CITY OF DAYTONA BEACH
UTILITIES DEPARTMENT

PVC AND DIP
RESTRAINED JOINT
TABLE
RW-6

FY-15/16
Drawing Date: 01/08
Drawn By: KLH
Checked By: JMP
Scale: NTS
Revision Date:
File Name:Restrained Joint Table RW-6

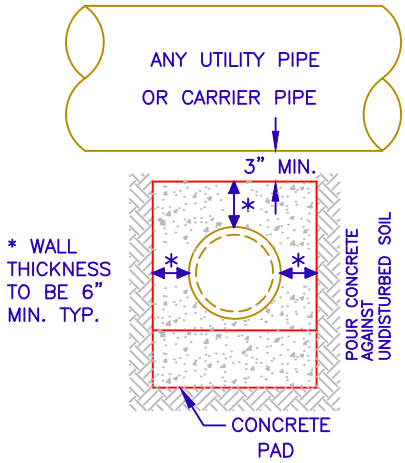

SECTION "A"–"A"

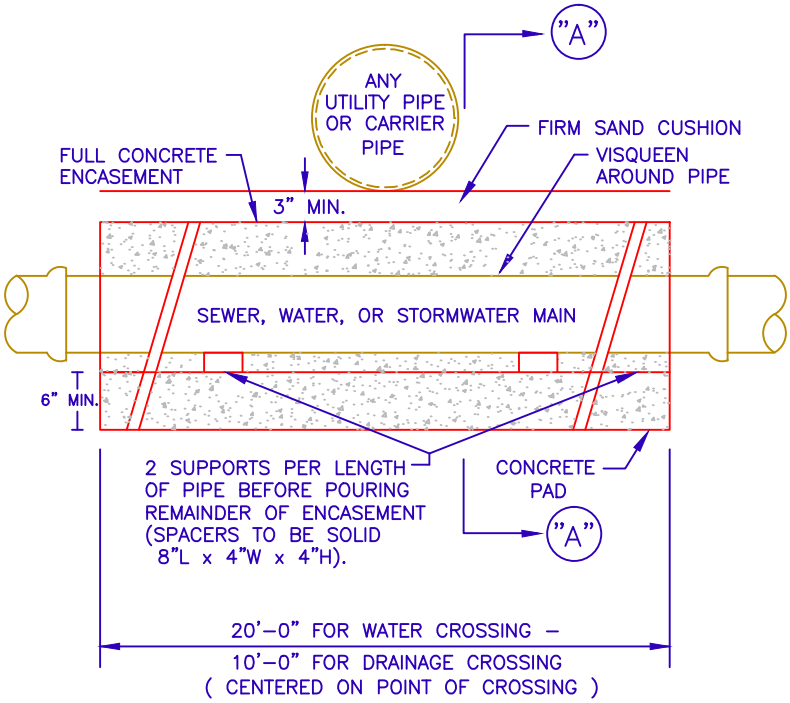

ELEVATION

NOTES:

1. ALL CONCRETE SHALL BE 3000 PSI MINIMUM STRENGTH AT 28 DAYS.
2. MAIN SHALL BE LOCATED ABOVE OR BELOW ENCASEMENT AS SHOWN ON PLANS OR AS DETERMINED IN THE FIELD, USE ENCASEMENT WHERE VERTICAL CLEARANCE IS LESS THAN 12 INCHES.

RETURN TO TOC

THE CITY OF DAYTONA BEACH
UTILITIES DEPARTMENT

UTILITY PIPE
CONCRETE ENCASEMENT
DETAIL
RW–7

FY–15/16
Drawing Date: 01/08
Drawn By: KLH
Checked By: JMP
Scale: NTS
Revision Date: 05/13
File Name: Utility Pipe Concrete Encasement RW–7

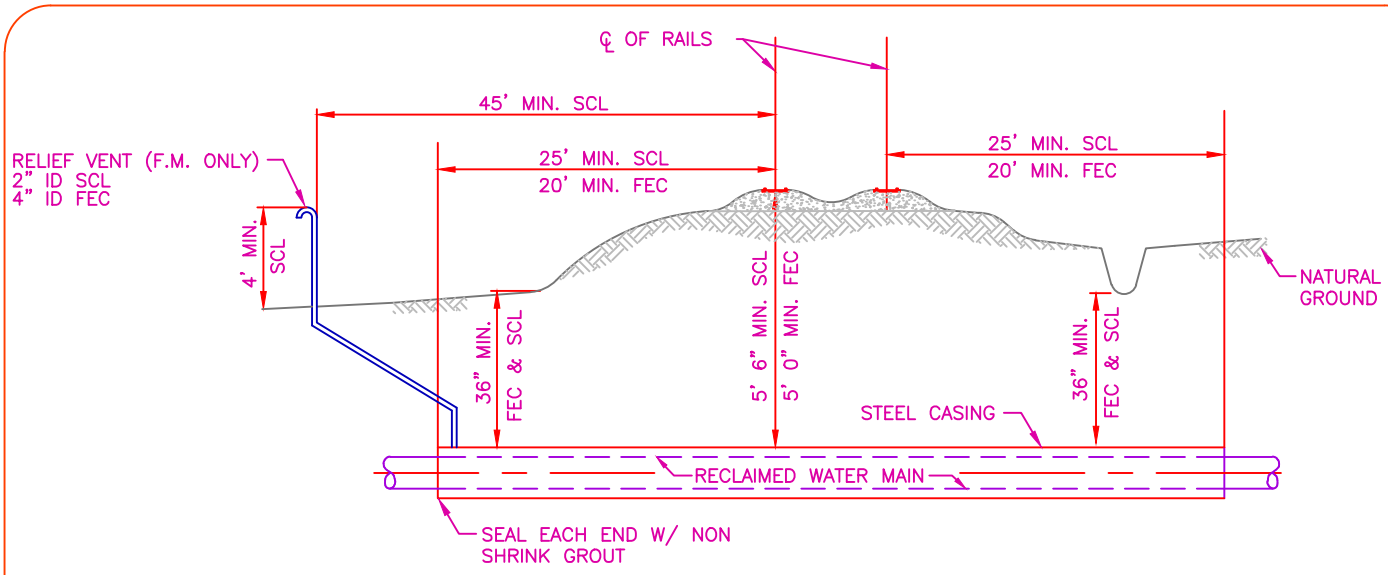

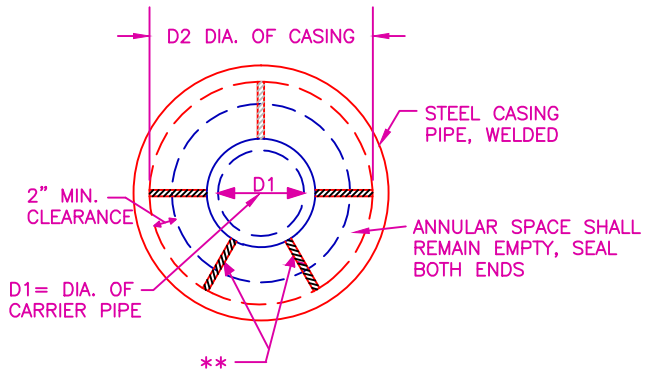

TYPICAL RAILROAD CROSSING

NTS

NOTE TO ENGINEER: CROSSING DETAIL SHALL BE TO SCALE AND SHOW EXISTING UTILITIES, CLEARANCES, CASING LENGTH, LOCATION OF PAVED ROAD AND LIMITS OF RIGHT-OF-WAY

CARRIER PIPE AND CASING PIPE SIZES (MIN.)														
CARRIER PIPE NOM. DIA. (D1)	4	6	8	10	12	14	16	18	20	24	30	36	42	48
CASING PIPE NOM. DIA. (D2)	14	16	18	22	24	30	30	30	36	36	48	54	60	66
WALL THICKNESS-INCHES *	PER AUTHORITY HAVING JURISDICTION													

NOTES:

1. MINIMUM COVER FOR TOP OF CASING TO R/R BASE SHALL BE 5.6' (SCL), 5.0' (FEC). MINIMUM COVER FOR TOP OF CASING ON ALL GROUND COVER SHALL BE 3.0'.
2. ROTATION OF CARRIER PIPE INSIDE THE CASING PIPE WILL NOT BE PERMITTED. RESTRAINED MECHANICAL OR FLANGED JOINT PIPE SHALL BE USED TO HELP PREVENT SUCH ROTATION.
3. SHOP DRAWINGS SHALL BE SUBMITTED OF CASING & CARRIER PIPE INSTALLATION FOR APPROVAL PRIOR TO FABRICATION OF PIPING, CASING, AND APPURTENANCES. CERTIFICATION OF CASING PIPE IS REQUIRED.
4. GROUTING OF SPACE BETWEEN CASING AND CARRIER PIPE NOT REQUIRED UNLESS NEGATIVE FLOTATION EXISTS.
5. WELDING OF CASING PIPE TO BE DONE BY CERTIFIED WELDER. ALL ENDS OF CASING PIPE SHALL BE CHAMFERED PRIOR TO ANY WELDING. SEAL END OF CASING PIPE WITH NON SHRINK GROUT.
6. CITY INSPECTOR SHALL BE PRESENT THROUGHOUT ALL BORE AND JACK ACTIVITIES.

* WITHIN THE CITY OF DAYTONA BEACH RIGHT OF WAY, USE CURRENT FDOT STANDARDS.

** SPECIALLY DESIGNED SPACERS SHALL BE USED IN ACCORDANCE WITH MANUFACTURER'S SPECIFICATIONS. USE CASCADE CASING SPACERS OR PRE-APPROVED EQUAL.

RETURN TO TOC

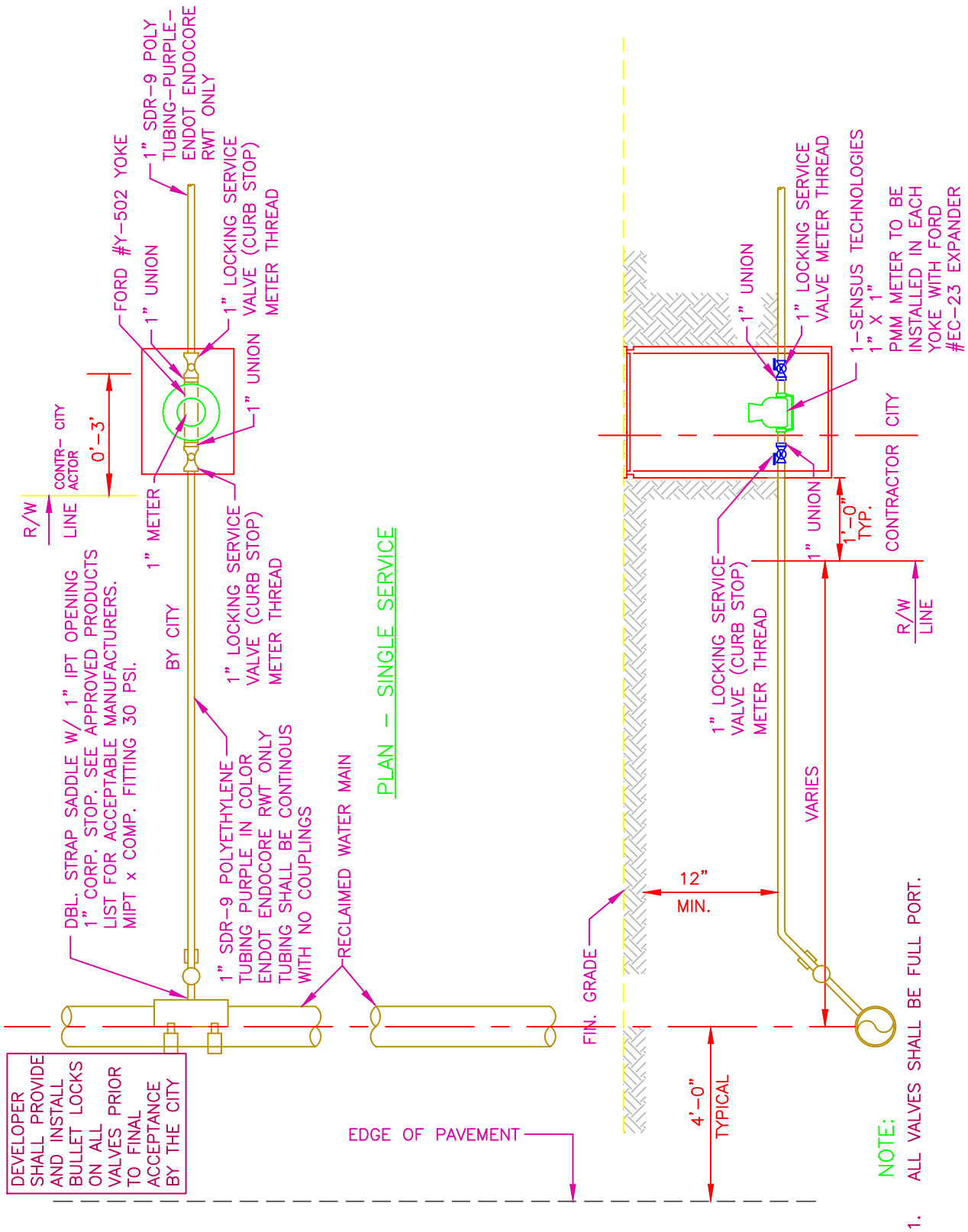

RETURN TO TOC

THE CITY OF DAYTONA BEACH
UTILITIES DEPARTMENT

IRRIGATION (SPRINKLER) SERVICE CONNECTION DETAIL
PAGE 1 OF 2
RW-9

FY-15/16	
Drawing Date:	01/08
Drawn By:	KLH
Checked By:	JMP
Scale:	NTS
Revision Date:	
File Name:	Irrigation Connection RW-9
Page 53	

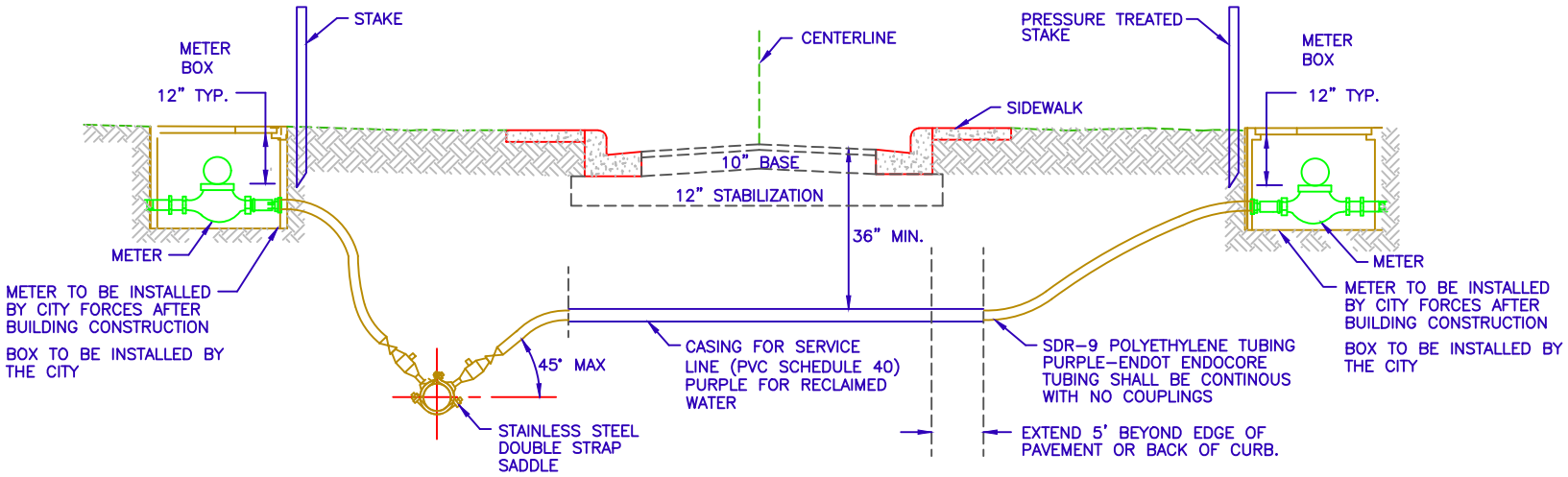

NOTES:

1. SERVICE BOX AND METER TO BE FURNISHED BY THE CITY.
2. METER SHALL BE INSTALLED ON R/W SIDE OF THE SIDEWALK.
3. MINIMUM SEPARATION BETWEEN CURB AND METER BOX AND BETWEEN METER BOX AND SIDEWALK.
4. CONTRACTOR TO LOCATE CURB STOP BY PLACING A STAKE (2"X2" SQUARE AT 24" ABOVE GROUND) TOP PAINTED WITH THE COLOR OF THE UTILITY SERVICE AND WITH THE LOT NUMBERS IT SERVES.
5. MINIMUM RESIDENTIAL METER SHALL BE 1"
6. ALL COMMERCIAL PROPERTIE'S METERS MUST BE SIZED BY THE ENGINEER-OF-RECORD.
7. ALL PROPOSED LINES (WHIPS) SHALL BE PLACED IN A METER BOX WITH CURB STOP ON THE END. NO WHIPS TO BE LEFT ABOVE GROUND.

THE CITY OF DAYTONA BEACH

UTILITIES DEPARTMENT

IRRIGATION (SPRINKLER) SERVICE (UNDER ROAD) DETAIL

PAGE 2 OF 2

RW-10

FY-15/16

Drawing Date: 01/08

Drawn By: KLH

Checked By: JMP

Scale: NTS

Revision Date:

File Name: Irrigation Connection Under Road RW-10

RETURN TO TOC

NOTE: TO DETERMINE THE MOST CURRENT REQUIREMENTS FOR STABILIZATION MATERIAL, BASE MATERIAL, AND ASPHALT MATERIAL PATCH AND THE REPLACEMENT DIMENSIONS CONTACT CITY ENGINEER IN THE PUBLIC WORKS DEPT AT 386-671-8610.

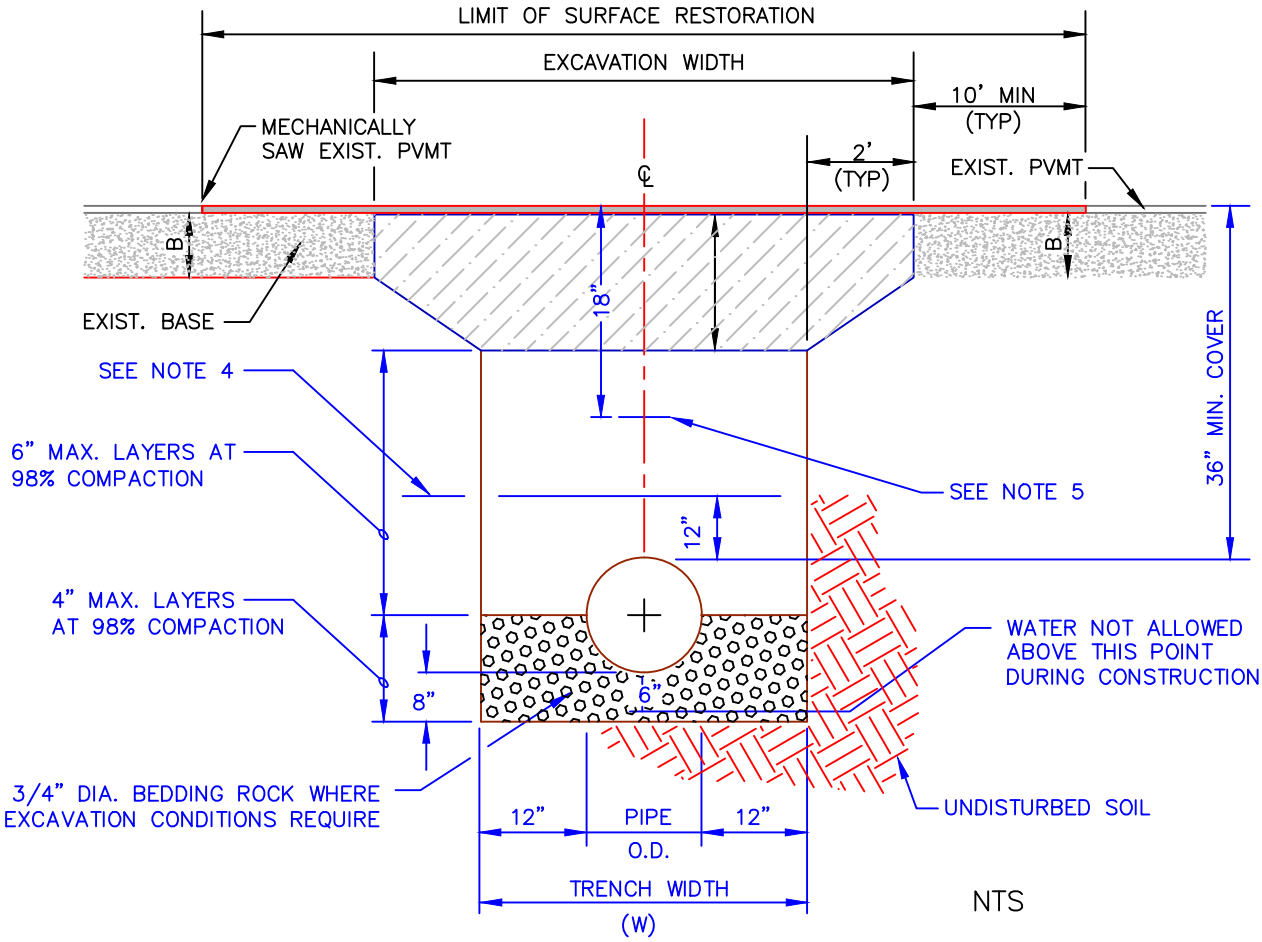

NOTES:

1. WHERE SOIL CONDITIONS CAN NOT BE MAINTAINED AS SHOWN ABOVE, PROVIDE APPROVED METHOD OF CONSTRUCTION.
2. SHEETING WILL BE REQUIRED AS DETERMINED IN THE FIELD.
3. COMPACTION PERCENTAGES SHOWN REFER TO A.A.S.H.T.O. T-180. PROVIDE COMPACTION TEST REPORTS TO CITY INSPECTOR.
4. MECHANICAL COMPACTION NOT ALLOWED BELOW THIS LEVEL.
5. FOR PVC PIPE ONLY - INSTALL METALLIC TAPE AND UF #12 INSULATED SINGLE STRAND COPPER WIRE OVER FULL LENGTH OF PIPE.
6. THE CONTRACTOR SHALL, UNLESS OTHERWISE NOTED, RESTORE ALL STRIPING, PAVEMENT MARKINGS, DELINEATORS, SIGNAGE AND TRAFFIC SIGNAL SYSTEM COMPONENTS DISTURBED DURING CONSTRUCTION ACTIVITIES. COST OF ALL WORK AND MATERIALS WILL BE CONSIDERED INCIDENTAL TO PATCH MATERIAL ITEMS.

RETURN TO TOC

THE CITY OF DAYTONA BEACH
UTILITIES DEPARTMENT

PAVEMENT CUT AND PATCH DETAIL RW-11

FY-15/16	
Drawing Date: 01/08	
Drawn By: KLH	
Checked By: JMP	
Scale: NTS	
Revision Date: 07/10	
File Name: Pavement Cut and Patch RW-11	

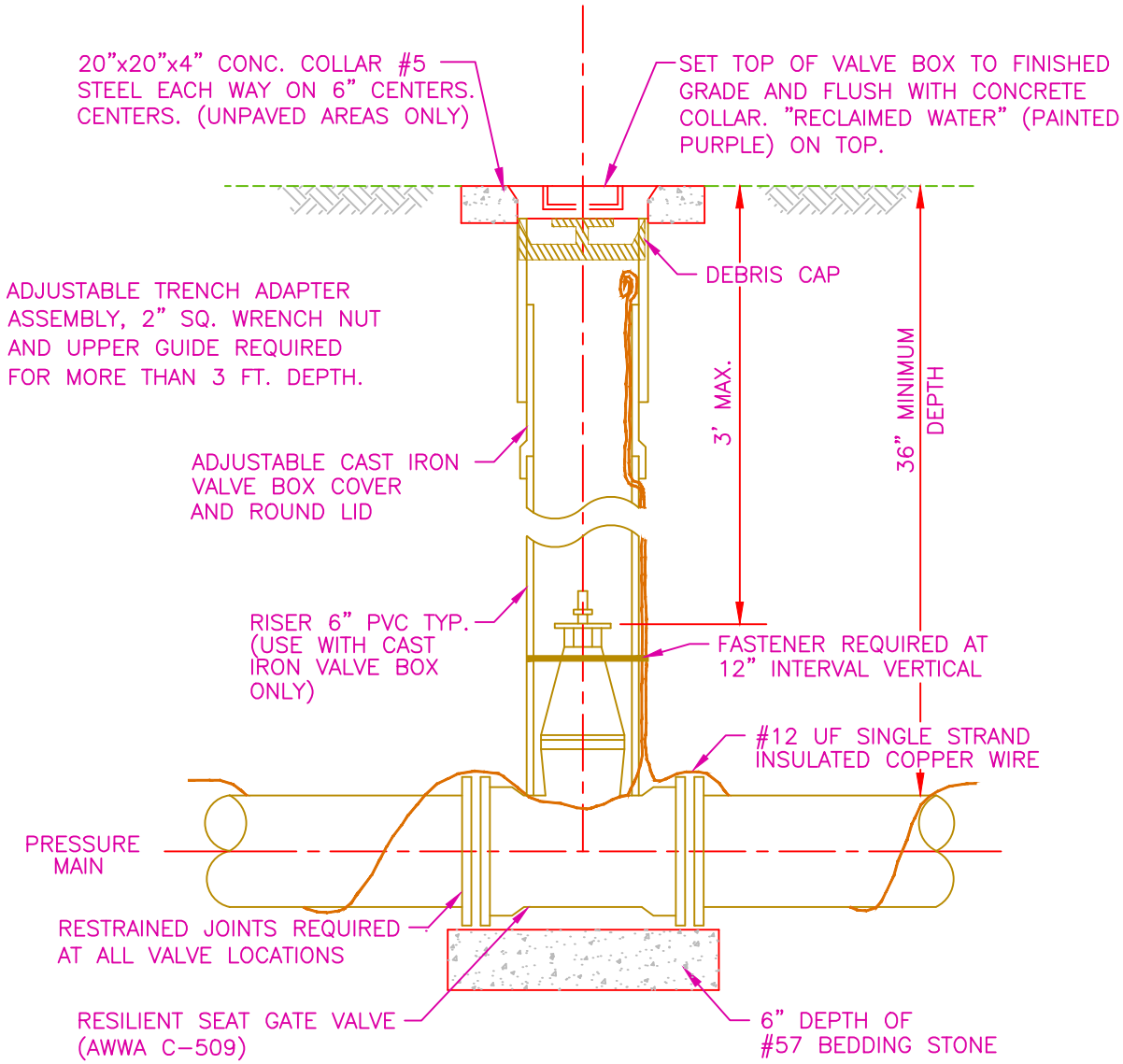

REUSE WATER COVER

NOTES:

1. ROD OR BOLT TEE WHERE APPLICABLE.
2. ACCEPTABLE MANUFACTURERS OF GATE VALVES INCLUDE: AMERICAN DARLING, KENNEDY, M&H, MUELLER, CLOW.
3. FOR CONSTRUCTION PURPOSES, THE PLANS SHALL DIMENSION THE LOCATION OF ALL VALVES AND VALVE BOXES BY STATE PLANE COORDINATES WITH STATION & OFFSETS FROM CL OF R/W.
4. A UF #12 SINGLE STRAND INSULATED COPPER TRACER WIRE SHALL BE LAID THE ENTIRE LENGTH OF ALL NON-METALLIC RECLAIMED WATER PIPE. ALL CONNECTION ENDS SHALL USE LIQUID TAPE AND A DIRECT BURIED SPLICE KIT (LAWSON 95313) OR EQUIVALENT.
5. ANY VALVE DEEPER THAN 36" SHALL HAVE AN EXTENSION BOLTED ON THE VALVE. THE OPERATING NUT SHALL BE 12" BELOW FINISHED GRADE.

RETURN TO TOC

THE CITY OF DAYTONA BEACH
UTILITIES DEPARTMENT

VALVE AND VALVE BOX DETAIL
RW-12

FY-15/16	
Drawing Date:	01/08
Drawn By:	KLH
Checked By:	JMP
Scale:	NTS
Revision Date:	07/10
File Name:	Valve and Box RW-12
Page	56

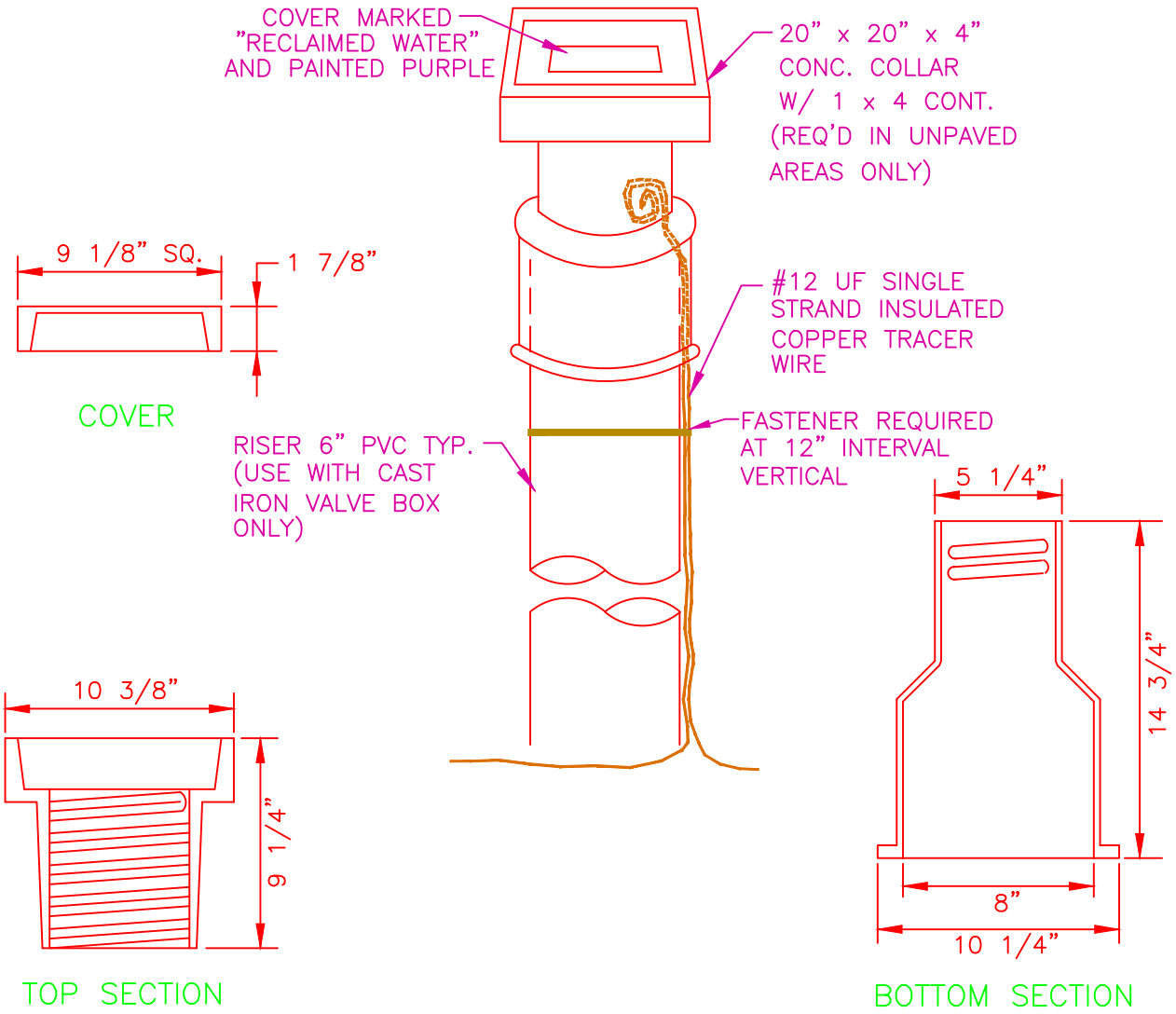

NOTE:

1. RECLAIMED WATER MAIN VALVE BOX AND COVER SHALL BE ADJUSTABLE SCREW TYPE.

RETURN TO TOC

THE CITY OF DAYTONA BEACH
UTILITIES DEPARTMENT

MAIN VALVE BOX DETAIL
RW-13

FY-15/16	
Drawing Date:	01/08
Drawn By:	KLH
Checked By:	JMP
Scale:	NTS
Revision Date:	
File Name:	Main Valve Box RW-13
Page	57

TOP OF LID

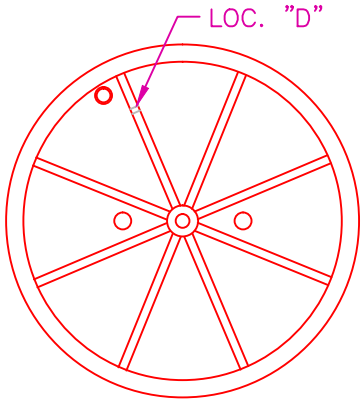

UNDERSIDE OF LID

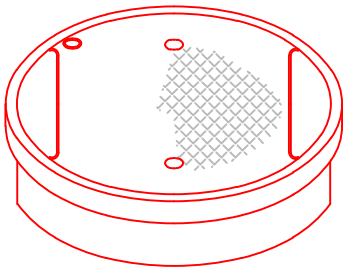

CARSON #91012T LID, PANTONE PURPLE IN COLOR TO BE MARKED IN 1/2" RAISED LETTERS: "RECLAIMED WATER, DO NOT DRINK". THE LID SHALL HAVE TWO 1" DIAMETER FINGER HOLES. THE TWO LOCKING TABS ON THE LID ARE TO BE REMOVED. THE LID IS TO BE ATTACHED TO THE #91012 BOX AS DESCRIBED BELOW.

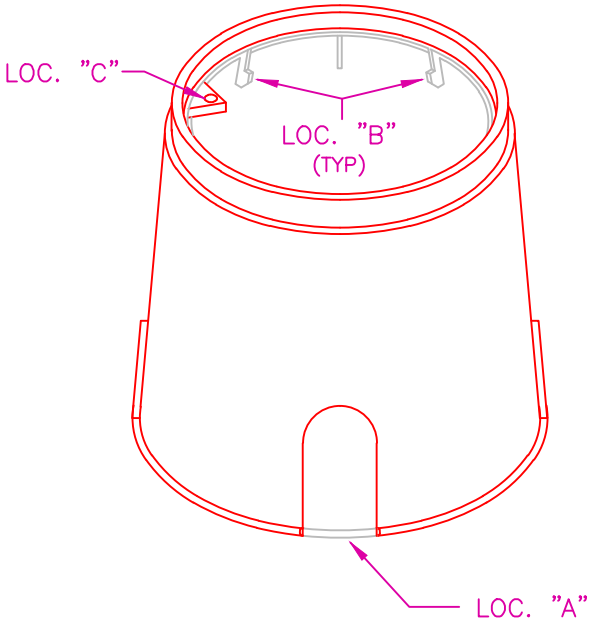

CARSON #91012 PLASTIC VALVE BOX PANTONE PURPLE IN COLOR. CONNECTOR STRAP AT LOCATION "A" TO BE REMOVED ALONG WITH TABS AT LOCATION "B". THE LID IS TO BE ATTACHED TO THE BOX WITH A 1/16" STRANDED STAINLESS STEEL CABLE, LOOPED AND SLEEVED THROUGH LOCATION "C" OF THE BOX AND LOCATION "D" OF THE LID TO ALLOW THE LID TO CLEAR THE BOX SIX TO SEVEN INCHES WHEN LIFTED.

NOTE: ONLY IF REQUIRED BY CITY

RETURN TO TOC

THE CITY OF DAYTONA BEACH
UTILITIES DEPARTMENT

CARSON PLASTIC
VALVE BOX
DETAIL
RW-14

FY-15/16	
Drawing Date: 01/08	
Drawn By: KLH	
Checked By: JMP	
Scale: NTS	
Revision Date:	
File Name:	Carson Valve Box RW-14

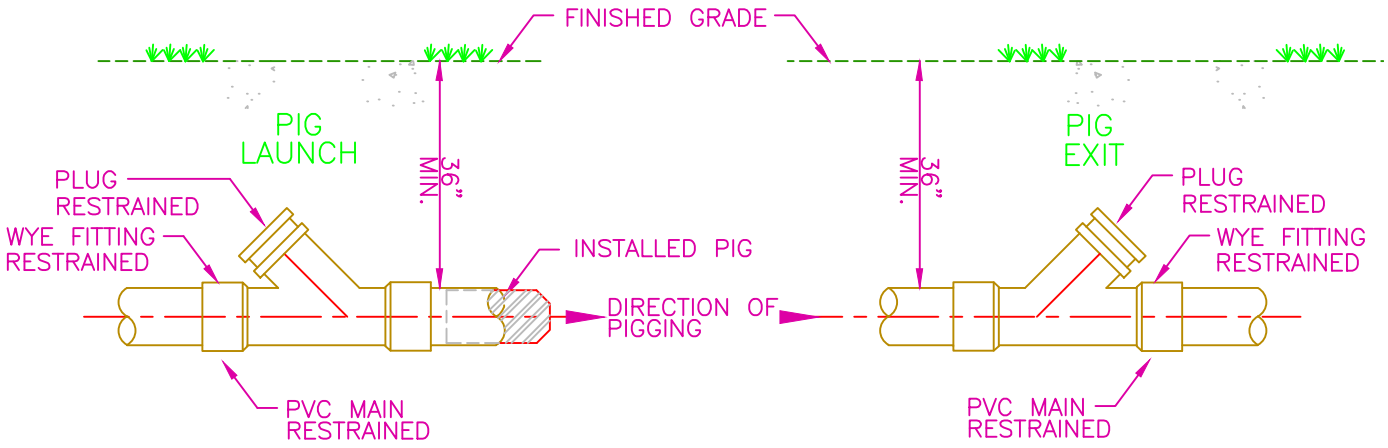

RETURN TO TOC

THE CITY OF DAYTONA BEACH
UTILITIES DEPARTMENT

PIG LAUNCH AND RECEIVING DETAIL
RW-15

FY-15/16	
Drawing Date: 01/08	
Drawn By: KLH	
Checked By: JMP	
Scale: NTS	
Revision Date:	
File Name: Pig Launch RW-15	
Page 59	

NTS

RETURN TO TOC

THE CITY OF DAYTONA BEACH
UTILITIES DEPARTMENT

RECLAIMED WATER
IN USE SIGN
RW–16

FY–15/16
Drawing Date: 12/10
Drawn By: KLH
Checked By: JMP
Scale: NTS
Revision Date: 03/16
File Name: Reclaimed Sign RW–16
Page 60

The City of Daytona Beach Utilities Department
List of Acceptable Products

Products that are submitted to the city engineering division prior to beginning project construction and are approved by the city may be substituted on a case by case basis for the products on the acceptable products list.

TABLE OF CONTENTS

Reclaimed Water Category 1 of 4: VALVES AND ACCESSORIES

Air Release Valves
Air Release Valves Enclosure
Blow Off Valve
Gate Valves General
Gate Valves 16-inch through 48-inch
Gate Valves 12-inch and Smaller (resilient seated only)
Sample Station (above grade)
Tapping Valves (resilient seated only)

Reclaimed Water Category 2 of 4: SERVICE MATERIALS

Corporation Stops (ball type)
Curb Stops Straight Valves Locking
CTS Polyethylene Tubing
Service Saddles

Reclaimed Water Category 3 of 4: PIPE MATERIALS

Casing Spacers (all sizes)
Casing End Seals
Ductile Iron / Cast Iron Cement Lined
PCCP Transmission Lines Greater than 30-inch
PVC, DR-18

Reclaimed Water Category 4 of 4: PIPE FITTINGS

Expansion Joints
Fittings C153 SSB / C110 Flange
Restrained Joints - Ductile Iron Pipe
Tapping Sleeves
Tapping Sleeves - Fabricated Steel

Reclaimed Water Category 1 of 4: VALVES AND ACCESSORIES

Air, Vacuum or Air/Vac Combination Release Valves

1. APCO	1. 200
2. ARI	2. ARI, D-040 / S-050 / S-010
3. Crispin	3. PL10
4. GA Industries	4. 920
5. Val-Matic	5. VM-38, VM-45

Air Release Valve Enclosure

1. Water Plus	1. No. 30 (131632) No. 40 (171730)
2. CDR	2. Boxes & Vaults
3. GlasMasters	3. Boxes & Vaults

Blow Off Valve

1. Hydro Guard	1. Automatic Blow Off
2. Kupferle Foundry Co.	2. Series TF 550
3. Water Plus	3. Series VB 2000

Gate Valves - general (resilient seat)
AWWA C509 and C515

1. American Flow Control	1. C509 and C515
2. Mueller	2. C509 (only)
3. Clow	3. C509 (only)
4. Kennedy	4. C509 (only)
5. US Pipe	5. C509 (only)
6. American AVK	6. C509 (only)
7. East Jordan Iron Works	7. C509 and C515

Gate Valves 16" - 48" (resilient seated only w/side actuators)

1. American Flow Control	1. Series 2500
2. Clow	2. Series F-6100
3. Mueller	3. Series A2361
4. US Pipe	4. Series 5460
5. Kennedy	5. Series 4571
6. M&H	6. Series 4067

Gate Valves 12" and Smaller (resilient seated only)

1. American Flow Control	1. Series 2500
2. American R/D	2. Series 2000
3. AVK	3. Series 25
4. Clow (McWane Owned)	4. Series F-6100
5. Kennedy (McWane Owned)	5. Series 4571
6. M&H (McWane Owned)	6. Series 4067
7. Mueller	7. Series A2360
8. US Pipe	8. Metroseal 250
9. Waterous	9. Series 500

Sample Station

1. Water Plus	1. Series 200A

Tapping Valves (resilient seated only)

1. American Flow Control	1. Series 2500
2. AVK	2. Series 25
3. Clow	3. Series F-6114
4. Kennedy	4. Series 4950
5. M&H	5. Series 4751
6. Mueller	6. T2360 & A2361
7. US Pipe	7. Metroseal 250
8. Waterous	8. Series 500

Reclaimed Water Category 2 of 4: SERVICE MATERIALS

Corporation Stops - Ball Type 1" & 2" (w / AWWA taper CC threads only / pack joint outlet for CTS)

1. Ford	1. FB1000
2. McDonald	2. 4701B-22
3. Mueller	3. H1500
4. Cambridge	4. 301-AB
5. James Jones	5. J-1900W

Locking Curb Stops - Straight Valves (curb stop to be ball type, reduced port FIP x FIP 1" x 1½")

1. Ford	1. B11-233W
2. McDonald	2. 6101W
3. Mueller	3. B20200-R
4. Cambridge	4. 224-FF
5. James Jones	5. J-1900W

Polyethylene Tubing - (purple w/ UV protection (SDR-9) 1" & 2" only)

1. Endot	1. Endotrace #14 wire

Service Saddles - Epoxy or nylon-coated stainless steel 18-8 type 304 straps

1. Smith Blair	1. Series 393, Series 397, Series 313
2. Ford	2. Series FC202
3. JCM	3. Series 406
4. Mueller	4. DR2S, DR2SOD
5. Romac	5. Series 202NS, Series 284
6. Cambridge	6. Series 403
7. Cascade	7. CNS2

Reclaimed Water Category 3 of 4: PIPE MATERIALS

Casing Spacers (all sizes) Stainless steel w/ vinyl runners

1. Advanced Products	1. Series SS
2. Cascade	2. Series CCS/ CCPS/ AZ
3. BMW	3. BMW-SS
4. Power Seal	4. Model 4810
5. PSI	5. Series S-G-2
6. PSI-Ranger	6. Ranger II
7. RACI	7. S/T, F/G, P/Q, M/N, E/H

Casing End Seals

1. Advanced Products	1. Model AC & AW
2. BMW	2. BMW wrap around end seal
3. Cascade	3. Model CCES
4. Power Seal	4. Model 4810ES
5. PSI	5. Model C, S, & W

Ductile Iron/ Cast Iron Cement Lined (class 350)

1. American
2. Clow
3. Griffin
4. McWane
5. US Pipe

PVC, DR-18, Purple Pipe

1. Freedom
2. Diamond
3. NapCo
4. JM
5. Certa-Lok

Reclaimed Water Category 4 of 4: PIPE FITTINGS

Expansion Joint

1. EBAA Iron
2. Mercer
3. Metraflex
4. Proco

Fittings - C153 SSB/C110 (cement or fusion bonded epoxy lined)

1. American
2. Assured Flow Sales
3. Griffin
4. Nappco/Sigma
5. Star
6. Union/Tyler
7. US Pipe
8. SIP Industries

1. Gradelock

7. Permafuse or cement lined

Restrained Joints - DIP

1. American	1. Fast Grip Gasket
2. EBAA Iron Inc.	2. Mega-lug series 1100, series 1700 restraint, 2003 PV series RS-3800 restrainer
3. Ford	3. UFR-1400, 1300C series
4. Star	4. Star Grip series 3000, All Grip series 3600
5. US Pipe	5. Field Loc Gasket
6. Sigma	6. One-LOK SLD (3-36")
7. Mueller	7. Aquagrip Restraint System
8. Romac	8. Grip Rings
9. SIP Industries	9. EZ - Grips

Tapping Sleeves - Mechanical joint for all taps on cast iron, ductile iron, all taps including size on size

1. American Flow Control	1. Series 2800
2. Clow	2. Series F-5205, F-5207
3. Mueller	3. Series H-615, H-616, H-619
4. US Pipe	4. Series T-9
5. Smith Blair	5. Style 622, Style 623
6. JCM	6. Series 412, Series 414

SANITARY SEWER DETAILS

TABLE OF CONTENTS

PAGE NO.		
68	S-1	SANITARY SEWER NOTES (PAGE 1 OF 4)
69	S-2	SANITARY SEWER NOTES (PAGE 2 OF 4)
70	S-3	SANITARY SEWER NOTES (PAGE 3 OF 4)
71	S-4	SANITARY SEWER NOTES (PAGE 4 OF 4)
72	S-5	WASTE WATER DAILY FLOWS
73	S-6	PIPE SEPARATION DETAIL
74	S-7	SANITARY SEWER CONCRETE ENCASEMENT
75	S-8	TYPICAL RAILROAD CROSSING
76	S-9	PAVEMENT CUT AND PATCH DETAIL
77	S-10	RESIDENTIAL SANITARY LATERAL
78	S-11A	COMMERCIAL SANITARY LATERAL
79	S-11B	COMMERCIAL SANITARY LATERAL
80	S-12	SANITARY LATERAL CLEANOUT
81	S-13	SANITARY SEWER MANHOLE & GENERAL NOTES
82	S-14	OUTSIDE DROP SANITARY MANHOLE (STANDARD)
83	S-15	OUTSIDE DROP SANITARY MANHOLE (RETROFIT)
84	S-16	SANITARY MANHOLE INVERT
85	S-17	RUBBER BOOT AND PRECAST JOINT CONNECTION
86	S-18	SANITARY SEWER COVER
87	S-19	SANITARY VALVE AND VALVE BOX
88	S-20	AUTOMATIC ARV/VACUUM VALVE DETAIL
89	S-21	MANUAL AIR RELEASE VALVE
90	S-22	PIG LAUNCH & RECEIVING DETAIL
91	S-23	LIFT STATION STANDARD DETAIL (SHEET 1 OF 7) WETWELL MOUNTED SANITARY OR COMBINED SEWER
92	S-23	LIFT STATION STANDARD DETAIL (SHEET 2 OF 7) WETWELL MOUNTED SANITARY OR COMBINED SEWER
93	S-23	LIFT STATION CONTROL & RTU DIAGRAMS (SHEET 3 OF 7) WETWELL MOUNTED SANITARY OR COMBINED SEWER
94	S-23	LIFT STATION CONTROL & RTU W/SP312E DIAGRAMS (SHEET 4 OF 7) WETWELL MOUNTED SANITARY OR COMBINED SEWER
95	S-23	LIFT STATION CONTROL & RTU W/SP312E DIAGRAMS (SHEET 5 OF 7) WETWELL MOUNTED SANITARY OR COMBINED SEWER
96	S-23	LIFT STATION CONTROL & RTU W/SP312E DIAGRAMS (SHEET 6 OF 7) WETWELL MOUNTED SANITARY OR COMBINED SEWER
97	S-23	LIFT STATION CONTROL & RTU DIAGRAMS (SHEET 7 OF 7) WETWELL MOUNTED SANITARY OR COMBINED SEWER
98	S-24	LIFT STATION GENERATOR SPECS & DETAILS (SHEET 1 OF 8) SUBMERSIBLE SANITARY OR COMBINED SEWER
99	S-24	LIFT STATION STANDARD DETAIL (SHEET 2 OF 8) SUBMERSIBLE SANITARY OR COMBINED SEWER
100	S-24	LIFT STATION STANDARD DETAIL (SHEET 3 OF 8) SUBMERSIBLE SANITARY OR COMBINED SEWER
101	S-24	LIFT STATION CONTROL & RTU W/SP312E DIAGRAMS (SHEET 4 OF 8) SUBMERSIBLE SANITARY OR COMBINED SEWER

SANITARY SEWER DETAILS

TABLE OF CONTENTS

PAGE NO.		
102	S-24	LIFT STATION CONTROL & RTU W/SP312E DIAGRAMS (SHEET 5 OF 8) SUBMERSIBLE SANITARY OR COMBINED SEWER
103	S-24	LIFT STATION CONTROL & RTU W/SP312E DIAGRAMS (SHEET 6 OF 8) SUBMERSIBLE SANITARY OR COMBINED SEWER
104	S-24	LIFT STATION CONTROL AND RTU DIAGRAMS (SHEET 7 OF 8) SUBMERSIBLE SANITARY OR COMBINED SEWER
105	S-24	LIFT STATION CONTROL AND RTU STANDARDS (SHEET 8 OF 8) SUBMERSIBLE SANITARY OR COMBINED SEWER
106	S-25	LIFT STATION GENERATOR SYSTEM SPECS & DETAILS (SHEET 1 OF 7) WETWELL MOUNTED RESIDENTIAL WASTEWATER
107	S-25	LIFT STATION STANDARD DETAIL (SHEET 2 OF 7) WETWELL MOUNTED RESIDENTIAL WASTEWATER
108	S-25	LIFT STATION CONTROL & RTU DIAGRAMS (SHEET 3 OF 7) WETWELL MOUNTED RESIDENTIAL WASTEWATER
109	S-25	LIFT STATION CONTROL & RTU W/SP312E DIAGRAMS (SHEET 4 OF 7) WETWELL MOUNTED RESIDENTIAL WASTEWATER
110	S-25	LIFT STATION CONTROL & RTU W/SP312E DIAGRAMS (SHEET 5 OF 7) WETWELL MOUNTED RESIDENTIAL WASTEWATER
111	S-25	LIFT STATION CONTROL & RTU W/SP312E DIAGRAMS (SHEET 6 OF 7) WETWELL MOUNTED RESIDENTIAL WASTEWATER
112	S-25	LIFT STATION CONTROL & RTU DIAGRAMS (SHEET 7 OF 7) WETWELL MOUNTED RESIDENTIAL WASTEWATER
113	S-26	LIFT STATION GENERATOR SPECS & DETAILS (SHEET 1 OF 8) SUBMERSIBLE RESIDENTIAL SEWER
114	S-26	LIFT STATION STANDARD DETAIL (SHEET 2 OF 8) SUBMERSIBLE RESIDENTIAL SEWER
115	S-26	LIFT STATION STANDARD DETAIL (SHEET 3 OF 8) SUBMERSIBLE RESIDENTIAL SEWER
116	S-26	LIFT STATION CONTROL & RTU W/SP312E DIAGRAMS (SHEET 4 OF 8) SUBMERSIBLE RESIDENTIAL SEWER
117	S-26	LIFT STATION CONTROL & RTU W/SP312E DIAGRAMS (SHEET 5 OF 8) SUBMERSIBLE RESIDENTIAL SEWER
118	S-26	LIFT STATION CONTROL & RTU W/SP312E DIAGRAMS (SHEET 6 OF 8) SUBMERSIBLE RESIDENTIAL SEWER
119	S-26	LIFT STATION CONTROL & RTU DIAGRAMS (SHEET 7 OF 8) SUBMERSIBLE RESIDENTIAL SEWER
120	S-26	LIFT STATION CONTROL & RTU STANDARDS (SHEET 8 OF 8) SUBMERSIBLE RESIDENTIAL SEWER
121	S-27	SANITARY SEWER ACCEPTABLE PRODUCTS (PAGE 1 OF 6)
122	S-28	SANITARY SEWER ACCEPTABLE PRODUCTS (PAGE 2 OF 6)
123	S-29	SANITARY SEWER ACCEPTABLE PRODUCTS (PAGE 3 OF 6)
124	S-30	SANITARY SEWER ACCEPTABLE PRODUCTS (PAGE 4 OF 6)
125	S-31	SANITARY SEWER ACCEPTABLE PRODUCTS (PAGE 5 OF 6)
126	S-32	SANITARY SEWER ACCEPTABLE PRODUCTS (PAGE 6 OF 6)

SANITARY SEWER
CONSTRUCTION & DESIGN STANDARDS

1. THE CITY'S UTILITIES DEPARTMENT SHALL BE GIVEN A MINIMUM OF 2 BUSINESS DAYS ADVANCE NOTICE (NOT INCLUDING HOLIDAYS) PRIOR TO BEGINNING ANY SANITARY SEWER CONSTRUCTION.
2. ALL DEWATERING ACTIVITIES EITHER DIRECTLY DISCHARGED OR THAT SUBSEQUENTLY USE THE CITY'S STORMWATER SYSTEM TO CONVEY GROUND OR SURFACE WATER FROM A SITE SHALL REQUIRE A STANDARD OR GENERAL USE PERMIT AS PER ARTICLE 7 SECTION 7 OF THE LAND DEVELOPMENT CODE. A PERMIT SHALL BE REQUIRED PRIOR TO ENGAGING IN ANY DEWATERING ACTIVITIES, OR IN ANY CON-STRUCTION ACTIVITIES. DEWATERING ACTIVITIES INCLUDE THE REMOVAL OF GROUND WATER FROM A CONSTRUCTION SITE, ENCLOSED VAULT, COFFERDAM, OR TRENCHES ALLOWING CONSTRUCTION OR MAIN-TENANCE TO BE DONE IN THE DRY, OR ANY ACTIVITY WHICH CHANGES THE IMPERVIOUS AREA OF LAND. SITE SPECIFIC PERMITS SHALL REQUIRE THE PAYMENT OF A PER ACRE FEE BASED ON THE SIZE OF THE DEVELOPMENT. GENERAL PURPOSE PERMITS SHALL REQUIRE THE PAYMENT OF AN ANNUAL FEE BASED ON ROUTINE SCHEDULE OF MAINTENANCE ACTIVITIES DISCHARGING DIRECTLY OR SUBSEQUENTLY INTO THE CITY'S MS4. DEWATERING PERMIT APPLICATIONS MAY BE FOUND AT http://www.codb.us/index.aspx?NID=262. FEES ARE SUBJECT TO ARTICLE 20 SECTION 3.1 OF THE LAND DEVELOPMENT CODE AND MUST BE SUBMITTED TO THE CITY OF DAYTONA BEACH UTILITY DEPARTMENT AT 125 BASIN STREET SUITE 100, DAYTONA BEACH FL 32114 BEFORE ANY USE OF THE MS4 WILL BE ALLOWED. FAILURE TO COMPLY WILL RESULT IN THE TERMINATION OF ACCESS TO THE CITY'S MS4 SYSTEM.
3. UPON COMPLETION, THE CONTRACTOR SHALL PROVIDE THE CITY UTILITIES DEPARTMENT WITH A CCTV INSPECTION LOG ON DVD AND A PRINTED REPORT FOR ALL GRAVITY MAINS AND LATERALS CONSTRUCTED. ALL WORK, WITH THE EXCEPTION OF FINAL GRADE ADJUSTMENT TO THE MANHOLES, SHALL BE COMPLETED PRIOR TO COMMENCING THE CCTV INSPECTION. THE CONTRACTOR SHALL COORDINATE THE CCTV INSPECTION TIME WITH THE CITY UTILITY INSPECTOR PRIOR TO INITIATING THE WORK. FINAL PAVING SHALL NOT COMMENCE UNTIL APPROVAL HAS BEEN RECEIVED FROM THE CITY UTILITY INSPECTOR.
4. SEWER LATERALS LOCATIONS SHALL BE MARKED ALONG THE OUTSIDE OF THE CURB WITH A SAW CUT "V", OR BY A METAL TAB SET INTO THE PAVEMENT.
5. THE CONTRACTOR SHALL BE REQUIRED TO PIG ALL FORCE MAINS EQUAL TO OR GREATER THAN 6" IN DIAMETER AND PRIMARY TRANSMISSION MAINS LOCATED ON COLLECTOR AND ARTERIAL ROADWAYS. LAUNCHING AND EXTRACTION POINTS SHALL BE DETERMINED BY THE CITY.
6. WITH RESPECT TO TIE-IN CONNECTIONS AND CORING OPERATIONS, THE CITY RESERVES THE RIGHT TO REQUIRE CONNECTIONS TO BE PERFORMED DURING PERIODS OF LOW FLOW (MIDNIGHT TO 6:00 A.M.) IN ORDER TO MINIMIZE SERVICE DISRUPTION TO EXISTING CUSTOMERS.
7. ALL WORK PERFORMED UPON SANITARY SEWER FACILITIES OWNED OR PROPOSED TO BE OWNED BY THE CITY SHALL BE CONSTRUCTED BY A LICENSED UNDERGROUND UTILITY CONTRACTOR OR LICENSED GENERAL CONTRACTOR, WHO IS LICENSED IN THE STATE OF FLORIDA AND REGISTERED WITH THE CITY.
8. UPON CONSTRUCTION COMPLETION AND ACCEPTANCE OF THE SYSTEM, IT SHALL BE THE DESIGN ENGINEER'S RESPONSIBILITY TO ENSURE THAT THE SYSTEM IS PROPERLY CERTIFIED AND ACCEPTED BY THE FLORIDA DEPARTMENT OF ENVIRONMENTAL PROTECTION AND AS-BUILTS ARE PROVIDED TO THE CITY'S UTILITIES DEPARTMENT PRIOR TO ANY USE OF THE SYSTEM.
9. FOR CONSTRUCTION PURPOSES, THE PLANS SHALL DIMENSION THE LOCATION OF ALL FORCE MAINS, VALVES, MANHOLES & LATERALS FROM THE BASELINE CONSTRUCTION AND FROM RIGHT-OF-WAY LINE.
10. LANDSCAPE PLANS SHALL CLEARLY DEPICT THE DESIGN LOCATION OF PLANTINGS RELATIVE TO THE LOCATION OF PUBLIC UTILITIES AND STORM WATER INFRASTRUCTURE IN ORDER TO EVALUATE POTENTIAL CONFLICTS.
11. ALL SANITARY STANDARD DETAILS SHALL APPLY TO ALL CONSTRUCTION WORK PERFORMED IN THE CITY OF DAYTONA BEACH BY REFERENCE IN THESE NOTES (S-1 TO S-16).
12. ALL VALVES SHALL BE IDENTIFIED AS SUCH WITH AN ENGRAVED BRASS 2" x 6" NAME PLATE EMBEDDED IN SURFACE OF CONCRETE COLLAR WITH SIZE, TYPE AND NUMBER OF TURNS.
13. FOR AS-BUILTS INFORMATION SEE THE CITY'S AS-BUILT DRAWING REQUIREMENTS ATTACHED TO THE BACK OF THE UTILITIES DEPARTMENT'S STANDARD DETAILS.

NEXT

RETURN TO TOC

SANITARY SEWER CONSTRUCTION & DESIGN STANDARDS (CONT'D)

14. ALL LIFT STATION WETWELL FASTENERS AND THROUGH-TOP CONNECTORS THAT CONTACT THE WETWELL (SUCH AS NIPPLES) SHALL BE 316 SS FASTENERS.
15. ALL GRAVITY SANITARY SEWER MAIN LINES SHALL BE 8" DIAMETER MINIMUM. COMMERCIAL SERVICE LATERALS ALL SHALL BE GREEN 6" DIA. OR LARGER. ALL SINGLE FAMILY RESIDENTIAL SERVICE LATERALS SHALL BE 6" – SINGLE SERVICES WITH CLEAN OUTS INSTALLED AT PROPERTY LINE.
16. ALL GRAVITY SANITARY SEWER MAIN LINES SHALL BE GREEN PVC SDR-26, ASTM D-3034, OR C-900 DR-25 MINIMUM PRESSURE CLASS 100. IN PLACES WHERE A MINIMUM COVER OF 4.0' CANNOT BE MAINTAINED OR IN DEPTHS OF TEN (10) FEET OR GREATER C-900 OR C-905 GREEN PVC DR-25, MINIMUM PRESSURE CLASS 100 SHALL BE USED.
17. FOR SINGLE FAMILY HOMES, SINGLE SIX INCH SEWER SERVICES LATERALS SHALL BE CONSTRUCTED AT EACH LOT OR UNIT AND LOCATED ON THE DOWNSTREAM SIDE OF THE LOT CENTER LINE. THESE SERVICES SHALL BE EXTENDED 4 FEET ABOVE GROUND AT THE PROPERTY LINE WITH A PVC RISER AND PLUG BEING EASILY VISIBLE FROM THE ROAD. RUBBER SEAL FITTINGS SHALL BE USED ON ALL LINES. NO GLUED JOINTS ARE PERMITTED ON LATERALS.
18. FOR MULTI-FAMILY AND COMMERCIAL SITES, SIX INCH MINIMUM SEWER SERVICES AND CLEANOUTS SHALL BE PROVIDED AS APPROVED BY THE CITY.
19. ALL SANITARY SEWER FORCE MAINS, INCLUDING FITTINGS, SHALL BE DUCTILE IRON PIPE (D.I.P.), EPOXY LINED, CLASS 350. FORCE MAIN MINIMUM DEPTH OF COVER SHALL BE 36". ALL FORCE MAINS SHALL BE DISTINCTLY MARKED BY A GREEN STRIPE OR COLORED GREEN. ALL NON DIP HORIZONTAL DIRECTIONAL DRILL FORCE MAINS SHALL HAVE A MINIMUM WORKING PRESSURE RATING OF 160 PSI. THE CITY MAY REQUIRE A HIGHER PRESSURE RATING DEPENDENT ON SITE CONDITIONS.
20. ALL SANITARY SEWER FORCE MAINS SHALL USE A THRUST RESTRAINT JOINT METHOD IN COMPLIANCE WITH THE DUCTILE IRON PIPE RESEARCH ASSOCIATION GUIDELINES. IN NO INSTANCE SHALL THRUST BLOCKS BE PERMITTED.
21. AS A GENERAL RULE, THE NUMBER OF JOINTS SHALL BE LIMITED WHENEVER POSSIBLE. IN SPECIAL CASES WHERE A POINT REPAIR TO AN 8" TO 12" PVC SEWER MAIN IS REQUIRED, THE PROPER RIGID WRAP AROUND SLEEVE MAY BE ALLOWED BY SPECIAL APPROVAL BY THE CITY.
22. ALL IN-LINE SANITARY SEWER FORCE MAIN VALVES SHALL BE RESILIENT SEAT GATE VALVES UNLESS OTHERWISE NOTED. VALVES SHALL BE SPACED A MAXIMUM OF 1000 FEET APART
23. ALL C-900 PVC PIPE REQUIREMENTS ARE REFERENCED TO THE C-900-97 STANDARDS. DR UPGRADES FOR BURST PROTECTION MAY BE REQUESTED WHEN USING THE C-900-07 STANDARDS.
24. MINIMUM GRAVITY SANITARY SEWER SLOPES ARE AS FOLLOWS:

8" PIPE	0.40%
10" PIPE	0.28%
12" PIPE	0.22%
15" PIPE	0.15%

OR OTHERWISE NOTED BY THE UTILITIES DEPARTMENT.

25. GRAVITY SANITARY SEWER LINES SHALL BE INSTALLED WHENEVER POSSIBLE UNDER PAVED AREAS WITHIN PUBLIC RIGHT-OF-WAYS. UTILITY EASEMENTS SHALL BE PROVIDED WHENEVER PUBLICLY-OWNED SEWER LINES ARE CONSTRUCTED OUTSIDE OF A PUBLIC RIGHT-OF-WAY.
26. GRAVITY SANITARY SEWER LINE CONSTRUCTION SHALL BE ACCOMPLISHED BY THE USE OF A LASER INSTRUMENT UNLESS ANOTHER METHOD IS PREVIOUSLY APPROVED BY THE CITY.
27. THE CONTRACTOR SHALL AT ALL TIMES, DURING PIPE LAYING OPERATIONS, DEWATER THE GROUND SUFFICIENTLY TO KEEP THE GROUNDWATER ELEVATION A MINIMUM OF 6" BELOW THE PIPE BEING LAID WITHIN THE AREA OF THE TRENCH.
28. ALL PIPES SHALL BE LAID ON A FIRM FOUNDATION. SOFT OR SPONGY BEDDING FOR PIPES IS NOT ACCEPTABLE. ANY UNSUITABLE MATERIAL SHALL BE REMOVED AND REPLACED WITH A DRY, COMPACTED, GRANULAR MATERIAL SATISFACTORY TO THE CITY.
29. ON ALL EXCAVATION AND BACKFILLING THE CONTRACTOR SHALL PROVIDE ADEQUATE SHEETING AND BRACING IN ORDER TO PROVIDE FOR THE SAFETY OF WORKERS, AS WELL AS REPRESENTATIVES OF THE CITY, THE DESIGN ENGINEER, AND THE DEVELOPER.
30. ALL TRENCHES SHALL BE BACKFILLED WITH ACCEPTABLE MATERIAL AND COMPACTED TO THE SPECIFIED MINIMUM COMPACTION (95% IN UNPAVED AREAS AND 98% IN PAVED AREAS) OF THE OPTIMUM DENSITY OF THAT MATERIAL BASED ON THE AASHTO T-180 MODIFIED PROCTOR TEST.

SANITARY SEWER CONSTRUCTION & DESIGN STANDARDS (CONT'D)

31. THE CONTRACTOR SHALL INSTALL A #12 UF SINGLE STRAND COPPER WIRE, OR SIMILAR DEVICE AS MAY BE APPROVED BY THE CITY FOR THE FULL LENGTH OF ALL NON-METALLIC SEWAGE FORCE MAINS. THIS PIPE LOCATOR AID SHALL BE INSTALLED BETWEEN 15" AND 24" BELOW FINISHED GRADE OR AS DIRECTED BY THE MANUFACTURER. TAPE SHALL BE COLOR CODED GREEN FOR SANITARY SEWER AND FORCE MAIN. LOCATER WIRE/DEVICE SHALL TERMINATE AT A LOCATION AND IN A MANNER CONVENIENT FOR CITY LOCATER STAFF.
32. ALL SEWER LINES WHICH ARE CONSTRUCTED OUTSIDE OF PUBLIC RIGHT-OF-WAYS WITHIN SIDE YARDS, BACKYARDS, AND OTHER POORLY ACCESSIBLE AREAS SHALL BE CONSTRUCTED OF GREEN C-900 PVC. ABSOLUTELY NO USE OF PLASTIC STYRENE FITTINGS SHALL BE ALLOWED.
33. ALL LOCAL COLLECTION SANITARY SEWER MANHOLES SHALL BE PRECAST WITH A MINIMUM INSIDE DIAMETER OF 4 FEET. MANHOLES OVER 6 FEET IN DEPTH SHALL HAVE THE BOTTOM PRE-CAST SECTION AT A MINIMUM OF FOUR FEET TALL.
34. STANDARD MANHOLES SHALL BE LOCATED AT INTERVALS NOT EXCEEDING 400 FEET.
35. ALL SEWER FITTINGS TO BE "HARCO" OR APPROVED EQUAL.
36. MANHOLE RIMS SHALL MATCH FLUSH WITH THE FINISH GRADE ELEVATION IN PAVED AREAS AND A MINIMUM OF 0.5 FEET AND MAXIMUM OF 1.0 FEET ABOVE GRADE GENERALLY IN UNPAVED AREAS.
37. THE CONTRACTOR SHALL CONSTRUCT SANITARY SEWER MANHOLES IN SUCH A WAY THAT SEWER LINES DO NOT INTERSECT SEALED JOINTS BETWEEN SECTIONS OF THE MANHOLE.
38. RUBBER BOOTS AND STAINLESS STEEL BANDS SHALL BE UTILIZED IN THE CONNECTION OF THE SEWER MAIN TO THE MANHOLES (SEE STANDARD MANHOLE AND BOOT DETAIL).
39. INDIVIDUAL SANITARY SERVICE CONNECTORS ON NEW CONSTRUCTION SHALL NOT BE CONNECTED DIRECTLY INTO MANHOLES, AND MUST BE CONNECTED TO SEWER MAIN LINES BY USE OF WYE CONNECTIONS, UNLESS OTHERWISE APPROVED BY THE CITY.
40. SANITARY SEWER DROP MANHOLES SHALL ONLY BE USED UNDER SPECIAL CONDITIONS AS APPROVED BY THE CITY. DROPS LESS THAN 3.0' SHALL NOT BE ALLOWED.
41. ALL SANITARY SEWER MANHOLE COVERS SHALL HAVE THE WORD "SANITARY" CAST INTO THEM AS SHOWN ON DETAIL S-9.
42. SANITARY SEWER MANHOLES WHICH HAVE SEWER FORCE MAINS DISCHARGING DIRECTLY INTO THEM SHALL BE FIBERGLASS OR POLY-ETHYLENE LINED. RETRO-FITTING OF MANHOLES WITH LINERS SHALL BE REQUIRED WHEN NEW CONNECTIONS SUCH AS THIS ARE MADE. FIBERGLASS SHALL BE A MINIMUM 1/2" THICKNESS UNLESS APPROVED OTHERWISE BY THE CITY. OTHER TYPES OF LINING METHODS AND MATERIALS MAY BE CONSIDERED ON A CASE BY CASE BASIS. UNDER SPECIAL CIRCUMSTANCES WHERE HYDROGEN SULFIDE IS A MAJOR CONCERN MANHOLES UPSTREAM AND/OR DOWNSTREAM OF THE FORCE MAIN TIE-IN OR WET WELL MAY ALSO BE REQUIRED TO HAVE LININGS INSTALLED.
43. EZ-WRAP PLASTIC, AS MANUFACTURED BY PRESS SEAL GASKET CORPORATION, SHALL BE USED ON THE OUTSIDE OF ALL MANHOLE AND WETWELL JOINTS. APPLY ONE LAYER OF 9" WRAP CENTERED ON EACH JOINT. A CITY INSPECTOR SHALL PERSONALLY INSPECT ALL JOINT SEALS PRIOR TO BACKFILLING OPERATIONS.
44. ANY NEW OR EXISTING ESTABLISHMENT WITH THE POTENTIAL TO DISCHARGE INDUSTRIAL OR COMMERCIAL WASTES INTO THE SEWER SYSTEM SHALL CONSTRUCT AND MAINTAIN AT HIS EXPENSE A SUITABLE CONTROL MANHOLE, OR MANHOLES, DOWNSTREAM FROM ANY TREATMENT, STORAGE, OR OTHER APPROVED WORKS, PRIOR TO THE CITY'S COLLECTION SYSTEM TO FACILITATE OBSERVATION, MEASUREMENT, AND SAMPLING OF ALL WASTES, INCLUDING ALL DOMESTIC SEWAGE FROM THE ESTABLISHMENT.
45. THE CONTROL MANHOLE OR MANHOLES SHALL BE CONSTRUCTED AT SUITABLE AND SATIS-FACTORY LOCATIONS MAKING THE MANHOLE ACCESSIBLE TO CITY PERSONNEL AT ALL TIMES FOR SAMPLING.
46. SANITARY SEWER LIFT STATIONS AND FORCE MAINS SIZE, MATERIAL, AND DESIGNS SHALL BE APPROVED BY THE CITY. LIFT STATIONS SHALL BE CONSTRUCTED WITH A MINIMUM WET WELL AS PER THE LIFT STATION DETAIL. A MINIMUM OF 6 FEET SHALL BE MAINTAINED BETWEEN LOWEST INFLUENT INVERT AND WETWELL FLOOR.
47. IT SHALL BE THE RESPONSIBILITY OF THE DESIGN ENGINEER TO PREPARE AND SUBMIT FLOTATION CALCULATIONS TO SIZE THE BASE OF THE WET WELL, AND ANY MANHOLES AS DEEMED NECESSARY BY THE CITY.

THE CITY OF DAYTONA BEACH
UTILITIES DEPARTMENT

SANITARY SEWER CONSTRUCTION & DESIGN STANDARDS (CONT'D)
(PAGE 3 OF 4)
S-3

FY- 15/16	
Drawing Date: 01/08	
Drawn By: KLH	
Checked By: JMP	
Scale: NTS	
Revision Date: 07/10	
File Name: Sanitary Sewer Notes P3	
Page 70	

SANITARY SEWER
CONSTRUCTION & DESIGN STANDARDS

TESTING REQUIREMENTS:

1. THE CONTRACTOR SHALL EMPLOY AN INDEPENDENT TESTING LABORATORY AT HIS OWN EXPENSE TO INSURE THAT COMPACTION OF ALL FILL MATERIAL IS COMPLETED PROPERLY. TESTS SHALL BE DONE ONE FOOT ABOVE THE PIPE AND THEN AT ONE FOOT VERTICAL INTERVALS UNTIL FINAL GRADE IS REACHED. TESTING SHALL BE COMPLETED AND TEST DOCUMENTS SUBMITTED TO THE CITY AT A MINIMUM FREQUENCY OF ONE SET OF TESTS PER EACH 300 FOOT OF PIPING AND ONE ADDITIONAL SET OF TESTS AT EVERY MANHOLE. IDENTIFICATION OF TEST LOCATIONS SHALL BE CLEARLY INDICATED ON TEST REPORTS. TEST RESULTS SHALL BE FORWARDED PROMPTLY TO THE CITY'S DESIGNATED SITE INSPECTOR.
2. ALL TESTING REQUIRED BY THE CITY SHALL BE PAID FOR BY THE CONTRACTOR / DEVELOPER.
3. THE CITY OF DAYTONA BEACH RESERVES THE RIGHT TO REQUIRE THE DEVELOPER TO PERFORM VACUUM TESTING OF ALL SANITARY MANHOLES AND TO AIR TEST SEWER MAINS.
4. ALL PROPOSED SEWER FORCE MAINS SHALL BE FLUSHED, PRESSURE TESTED AND CLEARED FOR SERVICE IN ACCORDANCE WITH THE FLORIDA DEPARTMENT OF ENVIROMENTAL PROTECTION REQUIREMENTS. THE CONTRACTOR SHALL NOTIFY THE CITY'S DESIGNATED SITE INSPECTOR WHO SHALL COORDINATE WITH CITY PERSONNEL AT THE WASTEWATER TREATMENT PLANT AT LEAST (3) THREE BUSINESS DAYS PRIOR TO BEGINNING A FULL–DIAMETER FLUSH OF THE MAINS PRIOR TO THE COMMENCEMENT OF PRESSURE TESTING. (SUBJECT TO AVAILABILITY).
5. SANITARY SEWER FORCE MAINS SHALL BE PRESSURE TESTED TO 150 PSI FOR 2 HOURS. WITH ALLOWABLE LEAKAGE TO BE X GAL/HR PER X" DIA. OF PIPE, PER X' OF MAIN TO BE TESTED.

ALLOWABLE LEAKAGE PER 1000 FT. OF PIPELINE * –GPH

AVERAGE TEST PRESSURE (PSI)	NOMINAL PIPE DIAMETER – INCHES																		AVERAGE TEST PRESSURE (PSI)
	3	4	6	8	10	12	14	16	18	20	24	30	36	42	48	54	60	64	
450	0.48	0.64	0.95	1.27	1.59	1.91	2.23	2.55	2.87	3.18	3.82	4.78	5.73	6.69	7.64	8.60	9.56	10.19	450
400	0.45	0.60	0.90	1.20	1.50	1.80	2.10	2.40	2.70	3.00	3.60	4.50	5.41	6.31	7.21	8.11	9.01	9.61	400
350	0.42	0.56	0.84	1.12	1.40	1.69	1.97	2.25	2.53	2.81	3.37	4.21	5.06	5.90	6.74	7.58	8.43	8.99	350
300	0.39	0.52	0.78	1.04	1.30	1.56	1.82	2.08	2.34	2.60	3.12	3.90	4.68	5.46	6.24	7.02	7.80	8.32	300
275	0.37	0.50	0.75	1.00	1.24	1.49	1.74	1.99	2.24	2.49	2.99	3.73	4.48	5.23	5.98	6.72	7.47	7.97	275
250	0.36	0.47	0.71	0.95	1.19	1.42	1.66	1.90	2.14	2.37	2.85	3.56	4.27	4.99	5.70	6.41	7.12	7.60	250
225	0.34	0.45	0.68	0.90	1.13	1.35	1.58	1.80	2.03	2.25	2.70	3.38	4.05	4.73	5.41	6.03	6.76	7.21	225
200	0.32	0.43	0.64	0.85	1.06	1.28	1.48	1.70	1.91	2.12	2.55	3.19	3.82	4.46	5.09	5.73	6.37	6.80	200
175	0.30	0.40	0.59	0.80	0.99	1.19	1.39	1.59	1.79	1.98	2.38	2.98	3.58	4.17	4.77	5.36	5.96	6.36	175
150	0.28	0.37	0.55	0.74	0.92	1.10	1.29	1.47	1.66	1.84	2.21	2.76	3.31	3.86	4.41	4.97	5.52	5.88	150
125	0.25	0.34	0.50	0.67	0.84	1.01	1.18	1.34	1.51	1.68	2.01	2.52	3.02	3.53	4.03	4.53	5.04	5.37	125
100	0.23	0.30	0.45	0.60	0.75	0.90	1.05	1.20	1.35	1.50	1.80	2.25	2.70	3.15	3.60	4.05	4.50	4.80	100

** IF THE PIPELINE UNDER TEST CONTAINS SECTIONS OF VARIOUS DIAMETERS, THE ALLOWABLE LEAKAGE WILL BE THE SUM OF THE COMPUTED LEAKAGE FOR EACH SIZE.*

$$L = \frac{SD\sqrt{P}}{133{,}200}$$

WHERE:

L = ALLOWABLE LEAKAGE, IN GALLONS PER HOUR
S = LENGTH OF PIPE TESTED, IN FEET
D = NOMINAL DIAMETER OF PIPE, IN INCHES
P = AVERAGE TEST PRESSURE DURING THE LEAKAGE TEST, IN POUNDS PER SQUARE INCH (GAUGE)

PREV

RETURN TO TOC

Waste Water - Table of Daily Flows

Types of Establishments	
Apartments	196.8 gpd (1)
Banquet hall (per seat)	15 gpd
Bars and cocktail lounges	5 gpcd (2)
Bathroom (non-residential)	250 gpd
Beauty shop (per seat)	150 gpd
Boarding schools (students and staff)	50 gpd
Boarding houses	50 gpcd
Bowling alleys (toilet wastes only, per lane)	75 gpd
Country clubs, per member	15 gpcd
Day schools (with cafeteria, no gymnasium or showers)	8 gpcd
Day schools (with cafeterias, gymnasiums & showers)	20 gpcd
Day workers at office and schools	15 gpcd
Dentist, per wet chair	200 gpd
Drive-in theaters (per car space)	5 gpd
Factories (with showers)	25 gpcd
Factories (no showers)	10 gpd/100 sq. ft. (3)
Funeral home	10 gpd/100 sq. ft.
Gas stations (no car wash)	400 gpd
Hospitals (with laundry) (per bed)	200 gpd
Hospitals (no laundry) (per bed)	150 gpd
Hotels and motels (per room & unit)	100 gpd
Laundromat (per washing machine)	200 gpcd
Mobile home park (per trailer)	200 gpd
Movie theaters, auditoriums, churches (per seat)	3 gpd
Nursing homes	125 gpd/100 sq. ft.
Office buildings	10 gpd/100 sq. ft.
Public institutions (other than those listed herein)	75 gpcd
Restaurants (per seat)	35 gpd
Restaurants (take-out)	35 gpd/100 sq. ft. (350 gpd min.)
Restaurants (Fast Food) (per seat)	25 gpd
Single-family residence	196.8 gpd
Townhouse residence	196.8 gpd
Shopping centers	10 gpd/100 sq. ft.
Stadiums, frontons, ball parks, etc. (per seat)	3 gpd
Stores, without kitchen wastes	5 gpd/100 sq. ft.
Speculative buildings	10 gpd plus 10 gpd/100 sq. ft.
Warehouses	30 gpd plus 10 gpd/1,000 sq. ft.

*** CITY WILL CONSIDER ALTERNATE FLOW RATES FOR VARIOUS ESTABLISHMENTS IF THE EOR CAN PROVIDE SUPPORTING DOCUMENTATION.***

SEWER DESIGN BASIS

AVERAGE DAILY FLOW AND PEAK DESIGN FLOW

ENGINEER TO DETERMINE AVERAGE DAILY AND PEAK DESIGN FLOW

DESIGN CALCULATIONS

DEVELOPER'S ENGINEER shall submit signed, sealed and dated design calculations with the PLANS for all sewer projects. Calculations shall show that sewers will have sufficient hydraulic capacity to transport all design flows.

RETURN TO TOC

POTABLE WATER MAIN TO BE CENTERED ABOVE THE CROSSING MAIN FOR MAXIMUM JOINT SEPARATION.

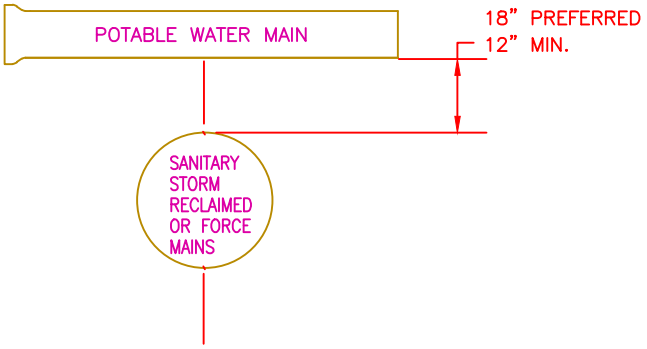

SECTIONAL VIEW

A MINIMUM HORIZONTAL SEPARATION OF 6' OUTSIDE TO OUTSIDE SHALL BE MAINTAINED BETWEEN RECLAIMED WATER LINES AND POTABLE WATER MAINS.

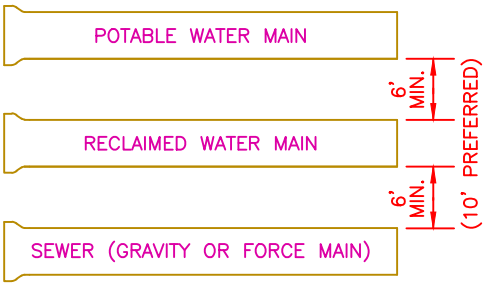

A MINIMUM HORIZONTAL SEPARATION OF 6' OUTSIDE TO OUTSIDE SHALL BE MAINTAINED BETWEEN RECLAIMED WATER LINES AND SEWER COLLECTION.

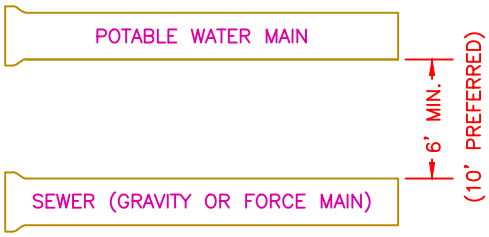

A MINIMUM HORIZONTAL SEPARATION OF 6' (OUTSIDE TO OUTSIDE), SHALL BE MAINTAINED BETWEEN SEWER COLLECTION LINES AND POTABLE WATER MAINS.
*

NEW OR RELOCATED, UNDERGROUND WATER MAINS SHALL BE LAID TO PROVIDE A HORIZONTAL DISTANCE OF AT LEAST SIX FEET, AND PREFERABLY TEN FEET, BETWEEN THE OUTSIDE OF THE WATER MAIN AND THE OUTSIDE OF ANY EXISTING OR PROPOSED GRAVITY- OR PRESSURE-TYPE SANITARY SEWER, WASTEWATER FORCE MAIN, OR PIPELINE CONVEYING RECLAIMED WATER NOT REGULATED UNDER PART III OF CHAPTER 62-610, F.A.C. THE MINIMUM HORIZONTAL SEPARATION DISTANCE BETWEEN WATER MAINS AND GRAVITY-TYPE SANITARY SEWERS SHALL BE REDUCED TO THREE FEET WHERE THE BOTTOM OF THE WATER MAIN IS LAID AT LEAST SIX INCHES ABOVE THE TOP OF THE SEWER. NEW OR RELOCATED, UNDERGROUND WATER MAINS CROSSING ANY EXISTING OR PROPOSED GRAVITY- OR VACUUM-TYPE SANITARY SEWER SHALL BE LAID SO THE OUTSIDE OF THE WATER MAIN IS AT LEAST SIX INCHES, AND PREFERABLY 12 INCHES, ABOVE OR AT LEAST 12 INCHES BELOW THE OUTSIDE OF THE OTHER PIPELINE. HOWEVER, IT IS PREFERABLE TO LAY THE WATER MAIN ABOVE THE OTHER PIPELINE. NEW OR RELOCATED, UNDERGROUND WATER MAINS CROSSING ANY EXISTING OR PROPOSED PRESSURE-TYPE SANITARY SEWER, WASTEWATER OR STORM WATER FORCE MAIN, OR PIPELINE CONVEYING RECLAIMED WATER SHALL BE LAID SO THE OUTSIDE OF THE WATER MAIN IS AT LEAST 12 INCHES ABOVE OR BELOW THE OUTSIDE OF THE OTHER PIPELINE AND CONDUIT. HOWEVER, IT IS PREFERABLE TO LAY THE WATER MAIN ABOVE THE OTHER PIPELINE.

AT THE UTILITY CROSSINGS DESCRIBED ABOVE, ONE FULL LENGTH OF WATER MAIN PIPE SHALL BE CENTERED ABOVE OR BELOW THE OTHER PIPELINE SO THE WATER MAIN JOINTS WILL BE AS FAR AS POSSIBLE FROM THE OTHER PIPELINE. ALTERNATIVELY, AT SUCH CROSSINGS, THE PIPES SHALL BE ARRANGED SO THAT ALL WATER MAIN JOINTS ARE AT LEAST THREE FEET FROM ALL JOINTS IN VACUUM-TYPE SANITARY SEWERS, OR PIPELINES CONVEYING RECLAIMED WATER REGULATED UNDER PART III OF CHAPTER 62-610. F.A.C., AND AT LEAST SIX FEET FROM ALL JOINTS IN GRAVITY OR PRESSURE-TYPE SANITARY SEWERS, WASTEWATER FORCE MAINS, OR PIPELINES CONVEYING RECLAIMED WATER NOT REGULATED UNDER PART III OF CHAPTER 62-610, F.A.C.

NTS

RETURN TO TOC

THE CITY OF DAYTONA BEACH
UTILITIES DEPARTMENT

PIPE SEPARATION DETAIL
S-6

FY: 15/16	
Drawing Date: 01/08	
Drawn By: KLH	
Checked By: JMP	
Scale: NTS	
Revision Date: 06/10	
File Name: Pipe Separation S-6	
Page 73	

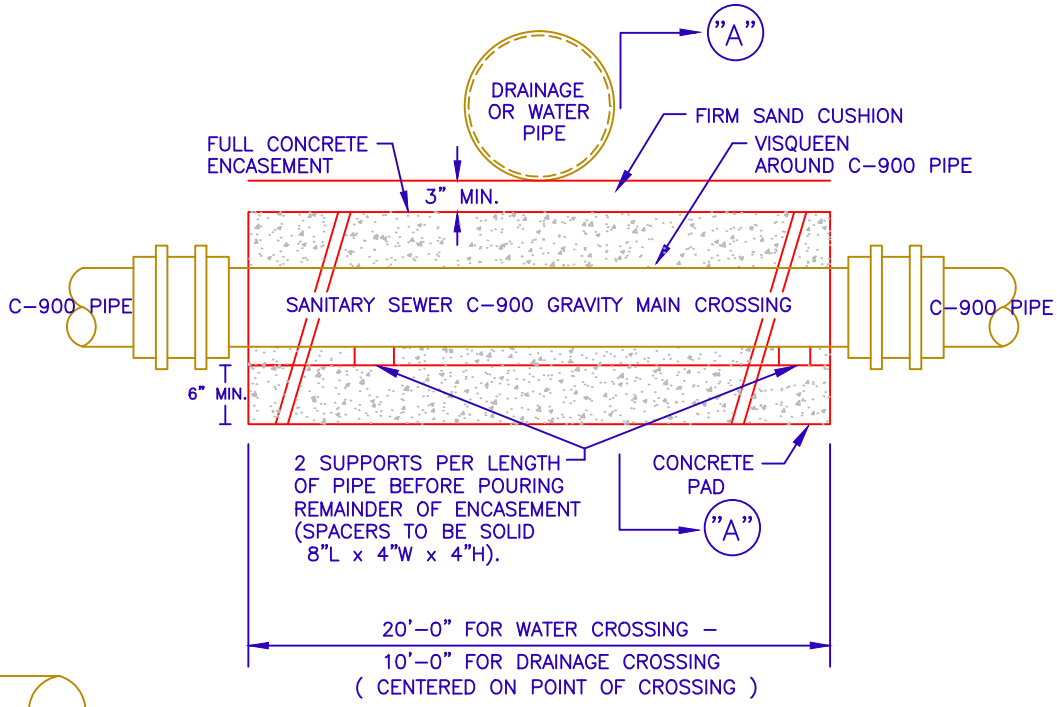

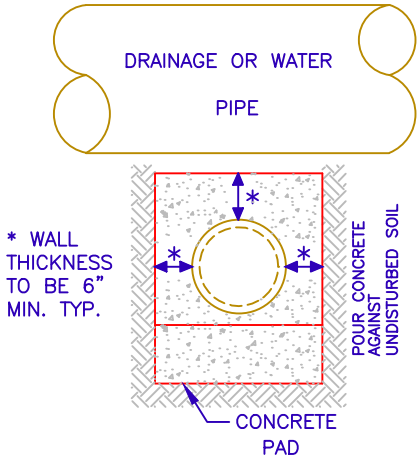

SECTION "A"–"A"

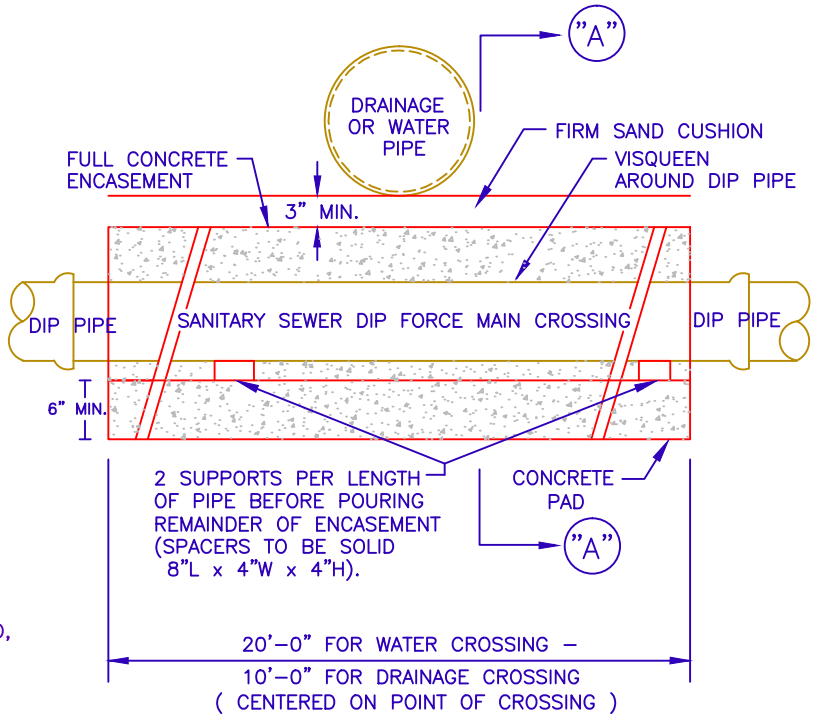

ELEVATION

NOTES:

1. ALL CONCRETE SHALL BE 3000 PSI MINIMUM STRENGTH AT 28 DAYS.
2. WATER MAIN SHALL BE LOCATED ABOVE OR BELOW ENCASEMENT AS SHOWN ON PLANS OR AS DETERMINED IN THE FIELD, USE ENCASEMENT WHERE VERTICAL CLEARANCE WATER MAIN AND SEWER MAIN IS LESS THAN 12 INCHES.

RETURN TO TOC

THE CITY OF DAYTONA BEACH
UTILITIES DEPARTMENT

SANITARY SEWER
CONCRETE ENCASEMENT
DETAIL
S-7

FY-15/16	
Drawing Date:	01/08
Drawn By:	KLH
Checked By:	JMP
Scale:	NTS
Revision Date:	
File Name:	Sanitary Concrete Encasement S-7

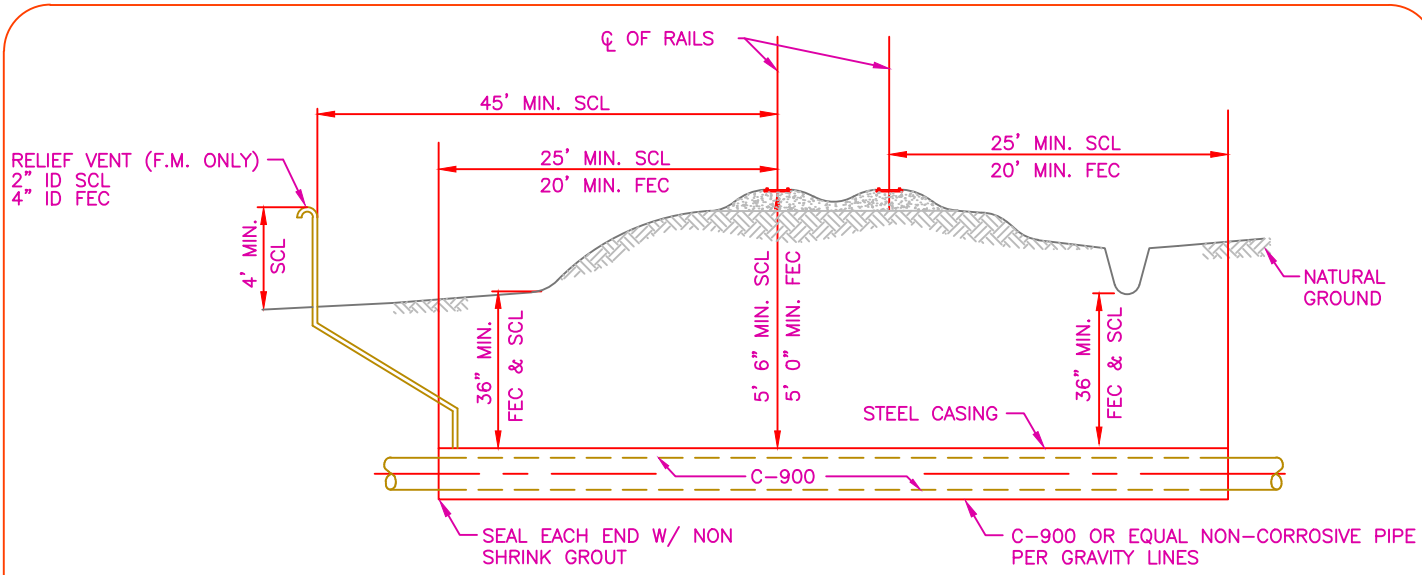

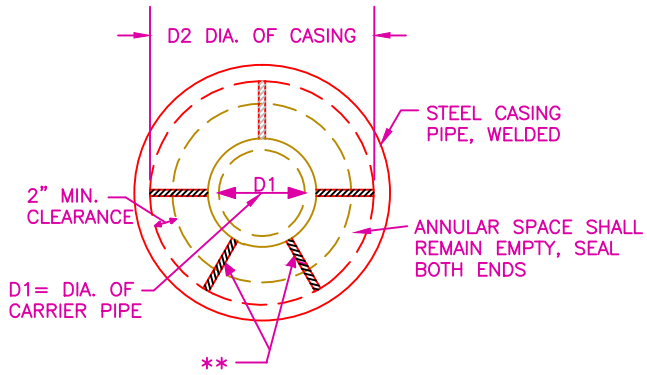

TYPICAL RAILROAD CROSSING

NTS

NOTE TO ENGINEER: CROSSING DETAIL SHALL BE TO SCALE AND SHOW EXISTING UTILITIES, CLEARANCES, CASING LENGTH, LOCATION OF PAVED ROAD AND LIMITS OF RIGHT-OF-WAY

CARRIER PIPE AND CASING PIPE SIZES (MIN.)														
CARRIER PIPE NOM. DIA. (D1)	4	6	8	10	12	14	16	18	20	24	30	36	42	48
CASING PIPE NOM. DIA. (D2)	14	16	18	22	24	30	30	30	36	36	48	54	60	66
WALL THICKNESS-INCHES *	PER AUTHORITY HAVING JURISDICTION													

NOTES:

1. MINIMUM COVER FOR TOP OF CASING TO R/R BASE SHALL BE 5.6' (SCL), 5.0' (FEC). MINIMUM COVER FOR TOP OF CASING ON ALL GROUND COVER SHALL BE 3.0'.
2. ROTATION OF CARRIER PIPE INSIDE THE CASING PIPE WILL NOT BE PERMITTED. RESTRAINED MECHANICAL OR FLANGED JOINT PIPE SHALL BE USED TO HELP PREVENT SUCH ROTATION.
3. SHOP DRAWINGS SHALL BE SUBMITTED OF CASING & CARRIER PIPE INSTALLATION FOR APPROVAL PRIOR TO FABRICATION OF PIPING, CASING, AND APPURTENANCES. CERTIFICATION OF CASING PIPE IS REQUIRED.
4. GROUTING OF SPACE BETWEEN CASING AND CARRIER PIPE NOT REQUIRED UNLESS NEGATIVE FLOTATION EXISTS.
5. WELDING OF CASING PIPE TO BE DONE BY CERTIFIED WELDER. ALL ENDS OF CASING PIPE SHALL BE CHAMFERED PRIOR TO ANY WELDING. SEAL END OF CASING PIPE WITH NON SHRINK GROUT.
6. CITY INSPECTOR SHALL BE PRESENT THROUGHOUT ALL BORE AND JACK ACTIVITIES.

* WITHIN THE CITY OF DAYTONA BEACH RIGHT OF WAY, USE CURRENT FDOT STANDARDS.

** SPECIALLY DESIGNED SPACERS SHALL BE USED IN ACCORDANCE WITH MANUFACTURER'S SPECIFICATIONS. USE CASCADE CASING SPACERS OR PRE-APPROVED EQUAL.

RETURN TO TOC

THE CITY OF DAYTONA BEACH
UTILITIES DEPARTMENT

TYPICAL RAILROAD CROSSING DETAIL
S-8

FY-15/16	
Drawing Date: 01/08	
Drawn By: KLH	
Checked By: JMP	
Scale: NTS	
Revision Date:	
File Name: Railroad Crossing S-8	
Page 75	

NOTE: TO DETERMINE THE MOST CURRENT REQUIREMENTS FOR STABILIZATION MATERIAL, BASE MATERIAL, AND ASPHALT MATERIAL PATCH AND THE REPLACEMENT DIMENSIONS CONTACT CITY ENGINEER IN THE PUBLIC WORKS DEPT AT 386-671-8610.

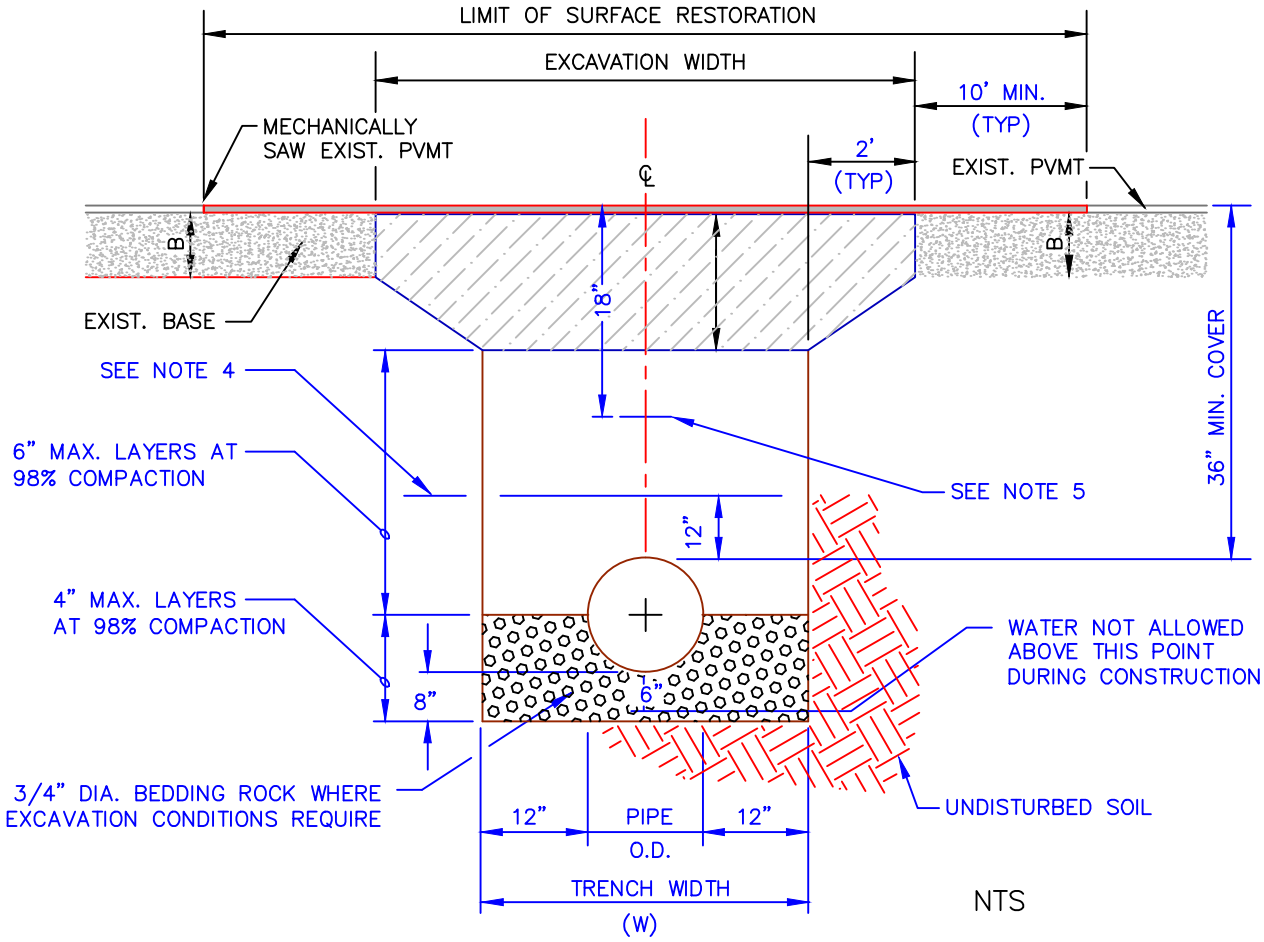

NTS

NOTES:

1. WHERE SOIL CONDITIONS CAN NOT BE MAINTAINED AS SHOWN ABOVE, PROVIDE APPROVED METHOD OF CONSTRUCTION.
2. SHEETING WILL BE REQUIRED AS DETERMINED IN THE FIELD.
3. COMPACTION PERCENTAGES SHOWN REFER TO A.A.S.H.T.O. T-180. PROVIDE COMPACTION TEST REPORTS TO CITY INSPECTOR.
4. MECHANICAL COMPACTION NOT ALLOWED BELOW THIS LEVEL.
5. FOR PVC PIPE ONLY – INSTALL METALLIC TAPE AND UF #12 INSULATED SINGLE STRAND COPPER WIRE OVER FULL LENGTH OF PIPE.
6. THE CONTRACTOR SHALL, UNLESS OTHERWISE NOTED, RESTORE ALL STRIPING, PAVEMENT MARKINGS, DELINEATORS, SIGNAGE AND TRAFFIC SIGNAL SYSTEM COMPONENTS DISTURBED DURING CONSTRUCTION ACTIVITIES. COST OF ALL WORK AND MATERIALS WILL BE CONSIDERED INCIDENTAL TO PATCH MATERIAL ITEMS.

RETURN TO TOC

THE CITY OF DAYTONA BEACH
UTILITIES DEPARTMENT

PAVEMENT CUT AND PATCH DETAIL
S-9

FY-15/16	
Drawing Date:	01/08
Drawn By:	KLH
Checked By:	JMP
Scale:	NTS
Revision Date:	07/10
File Name:	Pavement Cut and Patch S-9

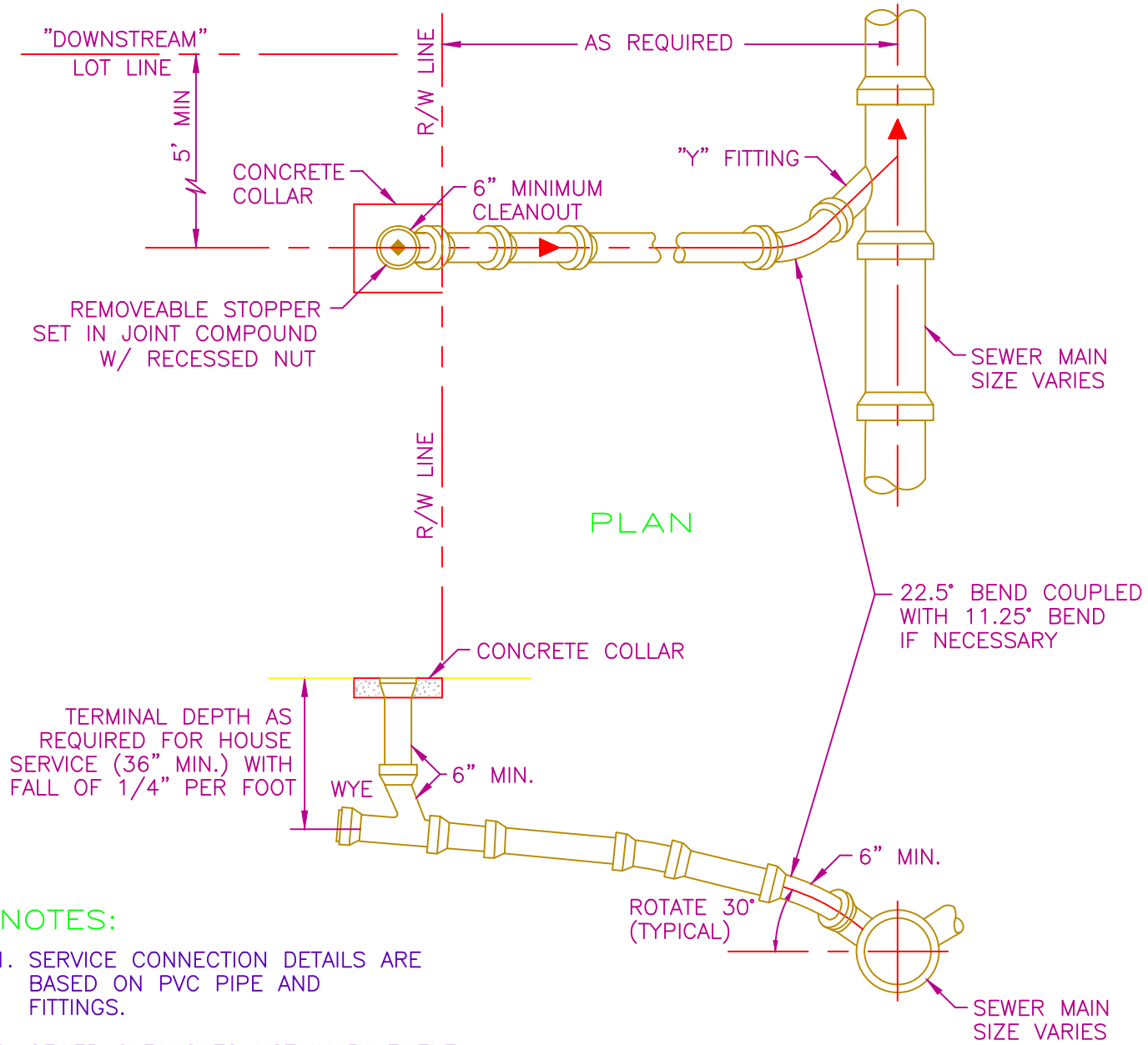

NOTES:

1. SERVICE CONNECTION DETAILS ARE BASED ON PVC PIPE AND FITTINGS.
2. SEWER CLEANOUTS NOT IN PAVEMENT SHALL HAVE CONCRETE COLLAR 18"x18"x6" AROUND THEIR TOPS AND MUST BE INSTALLED AND ADJUSTED TO FINISHED GRADE AT THE RIGHT-OF-WAY/PROPERTY LINE

RETURN TO TOC

THE CITY OF DAYTONA BEACH
UTILITIES DEPARTMENT

RESIDENTIAL SANITARY
LATERAL DETAIL

S-10

FY-15/16	
Drawing Date:	01/08
Drawn By:	KLH
Checked By:	JMP
Scale:	NTS
Revision Date:	06/10
File Name:	Residential Lateral S-10
Page	77

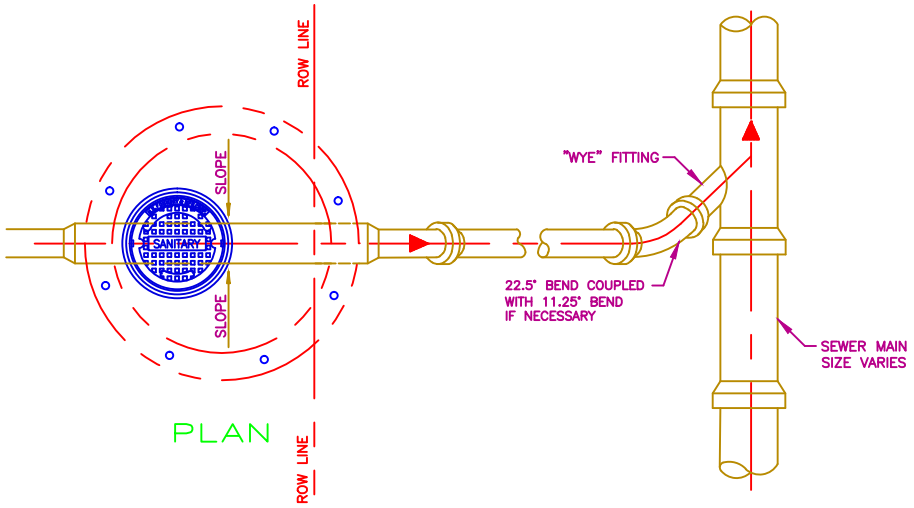

PLAN

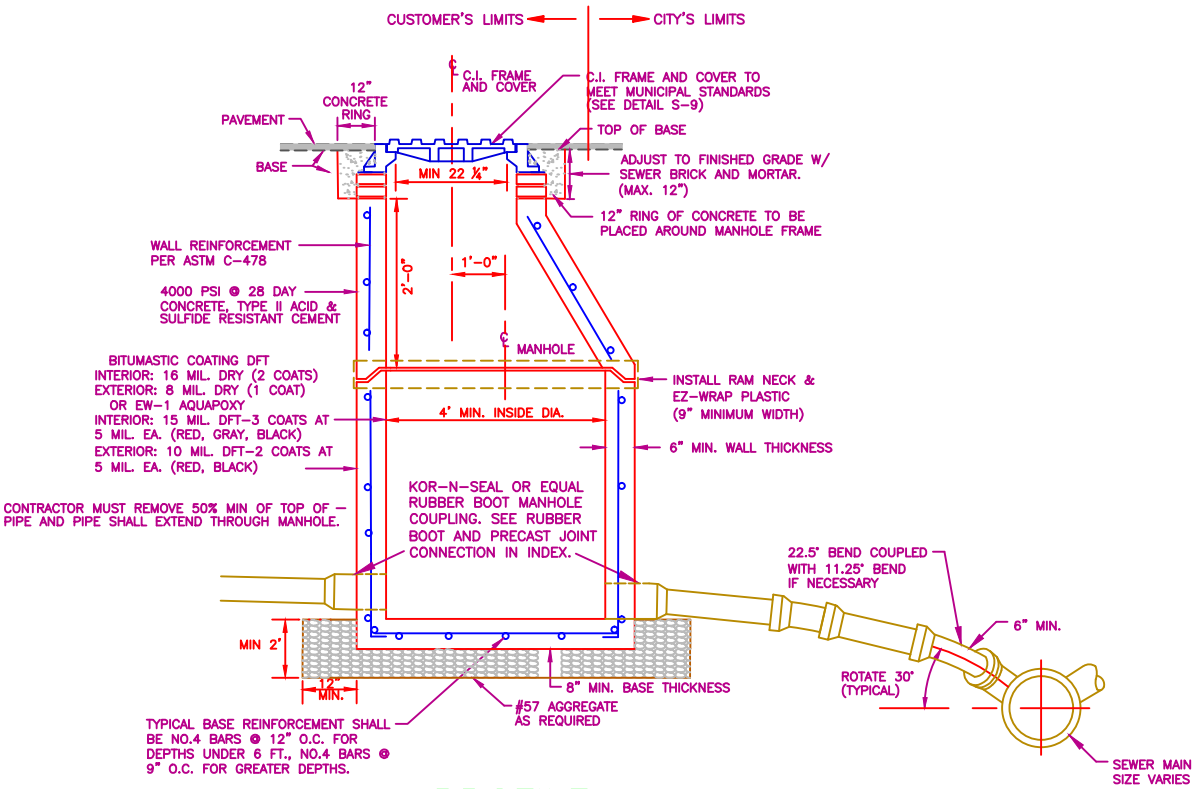

PROFILE

NOTES:

1. MANHOLE IS TO BE TYPE P (ALT A OR B) AND COMPLY WITH FDOT DESIGN STANDARDS INDEX 200 AND 201.
2. MANHOLE HEIGHT SHALL BE THREE TIMES THE OD OF THE LATERAL BUT NO LESS THAN 18".
3. WHEN VCP (CLAY) MAIN IS ENCOUNTERED UTILIZE A PVC WYE WITH TWO PVC TO VCP COUPLINGS FOR SERVICE CONNECTION

RETURN TO TOC

THE CITY OF DAYTONA BEACH
UTILITIES DEPARTMENT

COMMERCIAL SANITARY LATERAL DETAIL
S-11 A

FY-15/16	
Drawing Date:	11/10
Drawn By:	KLH
Checked By:	JMP
Scale:	NTS
Revision Date:	
File Name:	Commercial Lateral S-11 A

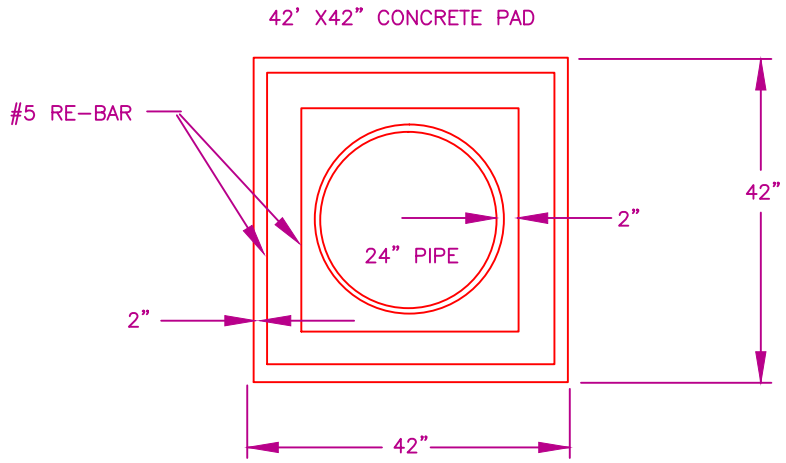

CITY SIDE

OWNER SIDE

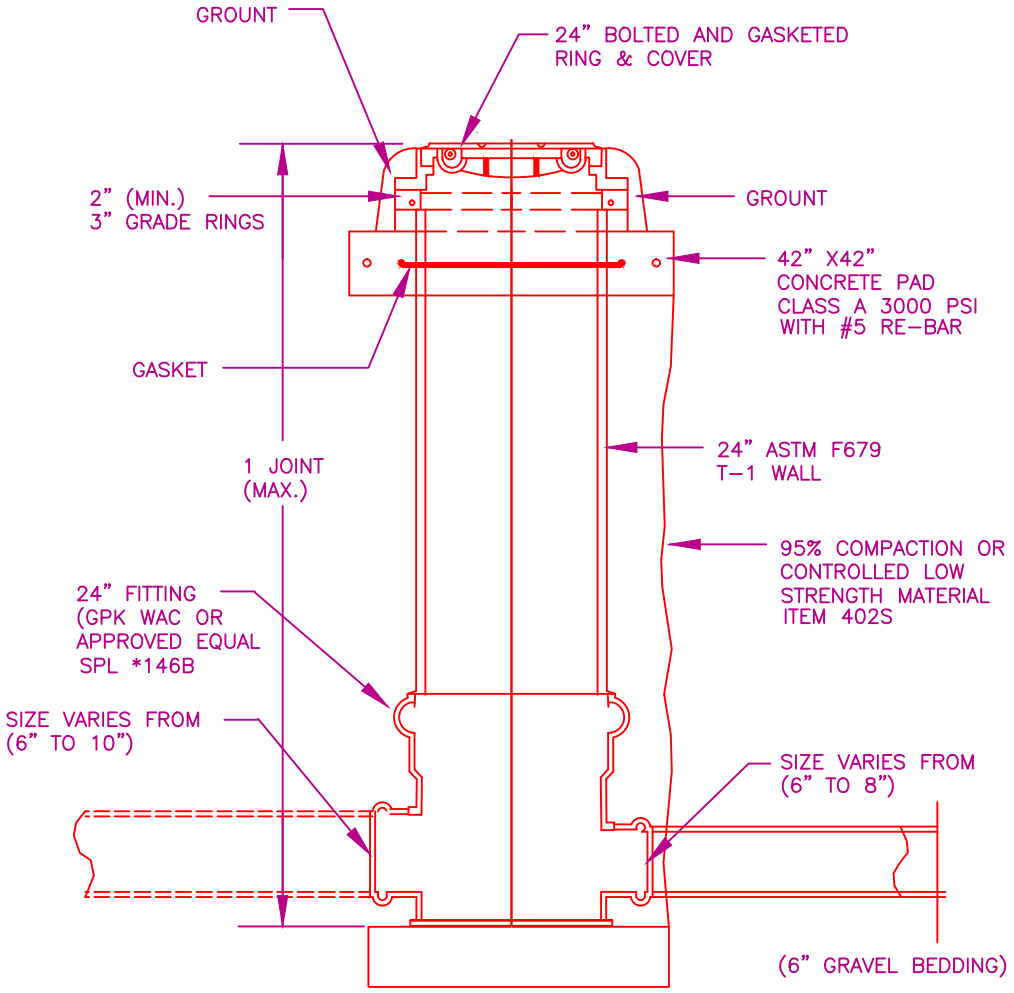

RETURN TO TOC

THE CITY OF DAYTONA BEACH
UTILITIES DEPARTMENT

ALTERNATE COMMERCIAL SANITARY LATERAL NON-TRAFFIC BEARING DETAIL S-11 B

FY-15/16	
Drawing Date: 2012	
Drawn By: JMP	
Checked By: STP	
Scale: NTS	
Revision Date:	
File Name: Alternate Commercial Sanitary Lateral S-11 B	
Page 79	

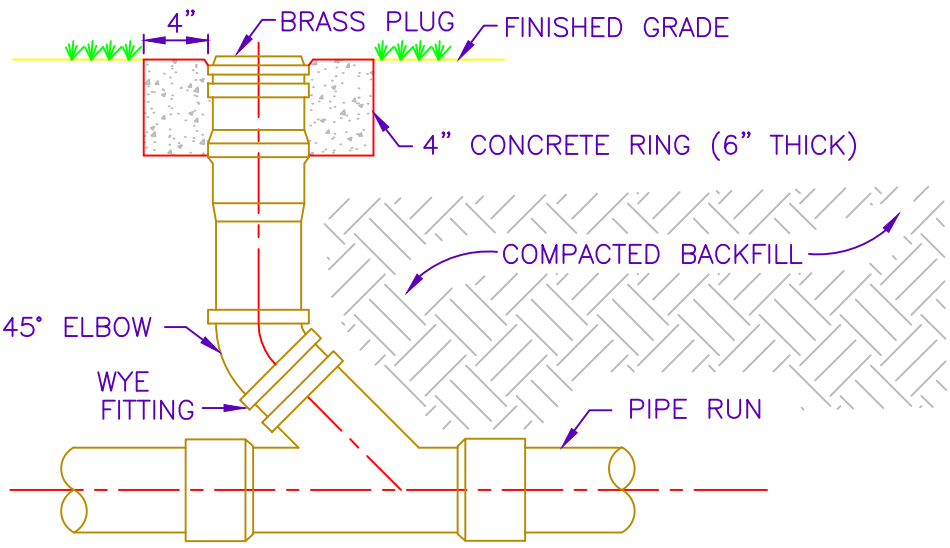

IN–LINE CLEANOUT

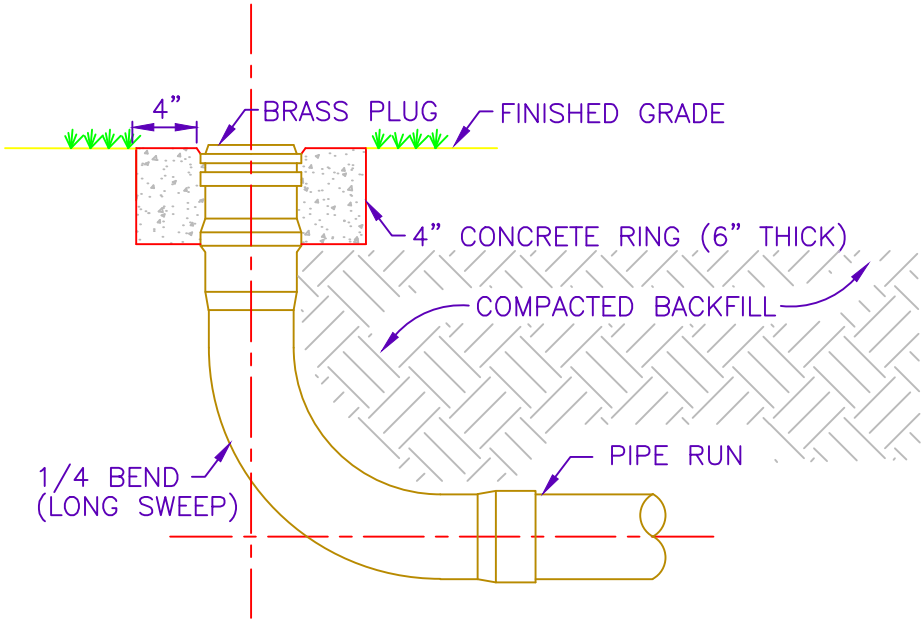

TERMINAL CLEANOUT

NOTE:
CONCRETE COLLAR REQUIRED IN UNPAVED AREAS

RETURN TO TOC

THE CITY OF DAYTONA BEACH
UTILITIES DEPARTMENT

SANITARY LATERAL
CLEANOUT
DETAIL
S–12

FY–15/16	
Drawing Date:	01/08
Drawn By:	KLH
Checked By:	JMP
Scale:	NTS
Revision Date:	
File Name:	Sanitary Cleanout S–12
Page	80

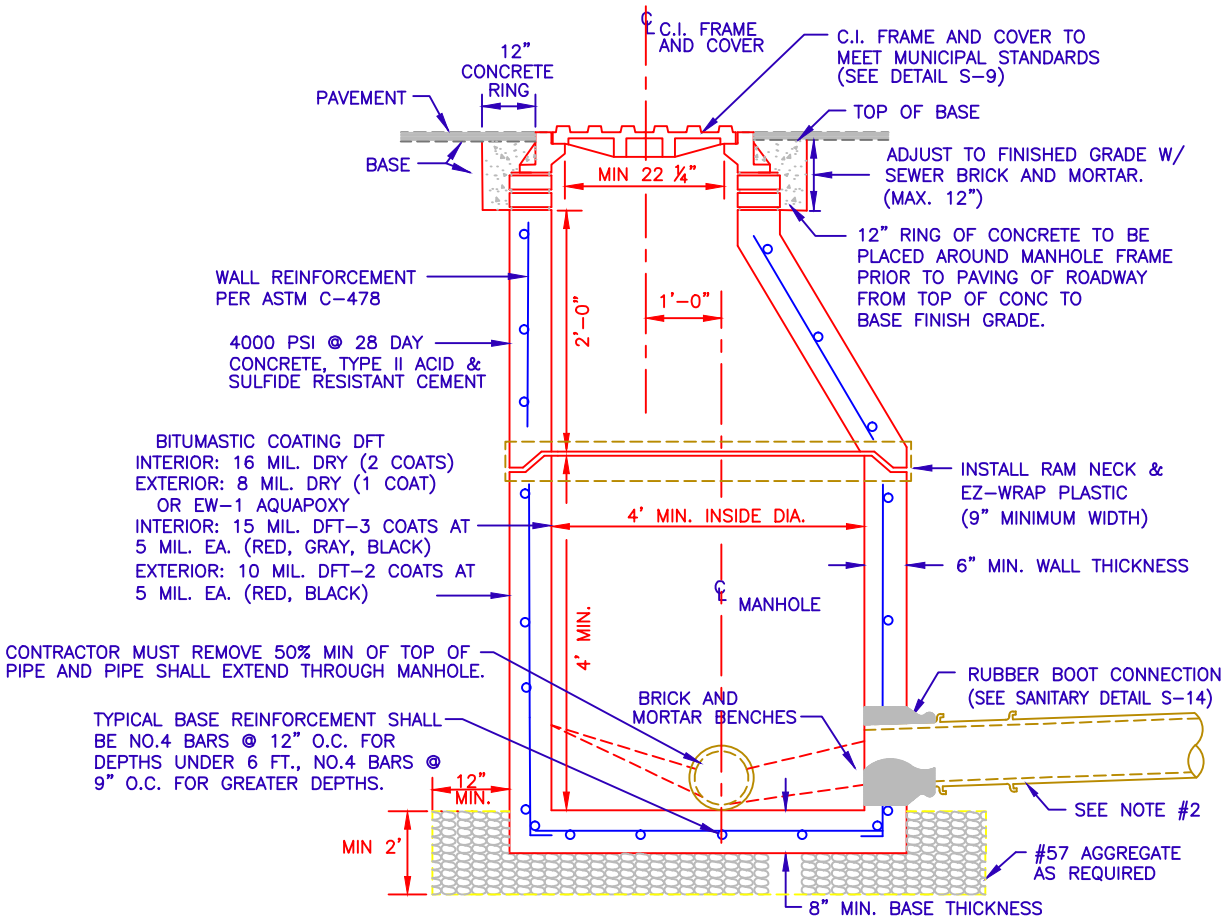

CROSS SECTIONAL VIEW

NTS

NOTES:

1. ON TRANSITIONS BETWEEN LARGER DIAMETER AND SMALLER SEWER COLLECTORS, INVERTS OF SEWERS SHALL BE MATCHED.
2. LAST 60' OF F.M. 12" PIPING ENTERING SEWER MANHOLE SHALL BE P.V.C. C-900 PLACED AT A NEGATIVE GRADE. 15" AND ABOVE SHALL BE P.V.C. C-905.
3. NON-PENETRATING PICK-HOLES IN ALL CONCRETE SECTIONS.
4. DFT = DRY FILM THICKNESS
5. 0.1' - DROP ACROSS MANHOLE TYP. (MEASURED DIA. OF CONCRETE RING)
6. MANHOLES 8' DEEP OR GREATER SHALL HAVE A MIN. 4' HIGH WALL BASE.
7. ANY PIPE ENTERING MANHOLE MUST HAVE A RUBBER BOOT CONNECTION.
8. MORTAR TO CONTAIN "HYDRATITE", OR APPROVED EQUAL, TO PREVENT SHRINKAGE.
9. SUB-GRADE BENEATH MANHOLES SHALL BE UNDISTURBED GRANULAR UNSATURATED SOIL. No. 57 AGGREGATE STONE SHALL BE USED IN WET CONDITIONS AND/OR WHERE UNSUITABLE MATERIAL IS ENCOUNTERED.
10. CONTRACTOR SHALL PROVIDE THICKER MANHOLE WALLS AND BASES AS REQUIRED TO PREVENT FLOTATION BASED ON HISTORIC HIGH GROUND WATER TABLE ELEVATIONS AS DETERMINED USING ACCEPTED ENGINEERING PRACTICES AND/OR APPROVED BY UTILITIES DEPARTMENT.
11. SHOP DRAWINGS FOR ALL STRUCTURES SHALL BE SUBMITTED TO AND APPROVED BY THE DESIGN ENGINEER PRIOR TO INSTALLATION.
12. NO BUG HOLES OR HONEYCOMB WILL BE ACCEPTED.
13. ENDS OF THE TOP AND BOTTOM SECTIONS OF THE MANHOLE SHALL FIT FLUSH TOGETHER.

RETURN TO TOC

THE CITY OF DAYTONA BEACH
UTILITIES DEPARTMENT

SANITARY SEWER MANHOLE AND GENERAL NOTES
S-13

FY-15/16	
Drawing Date: 01/08	
Drawn By: KLH	
Checked By: JMP	
Scale: NTS	
Revision Date: 06/10	
File Name: Sanitary Sewer Manhole S-13	

NOTE:

GENERAL NOTES ON DETAIL S-10 APPLY.

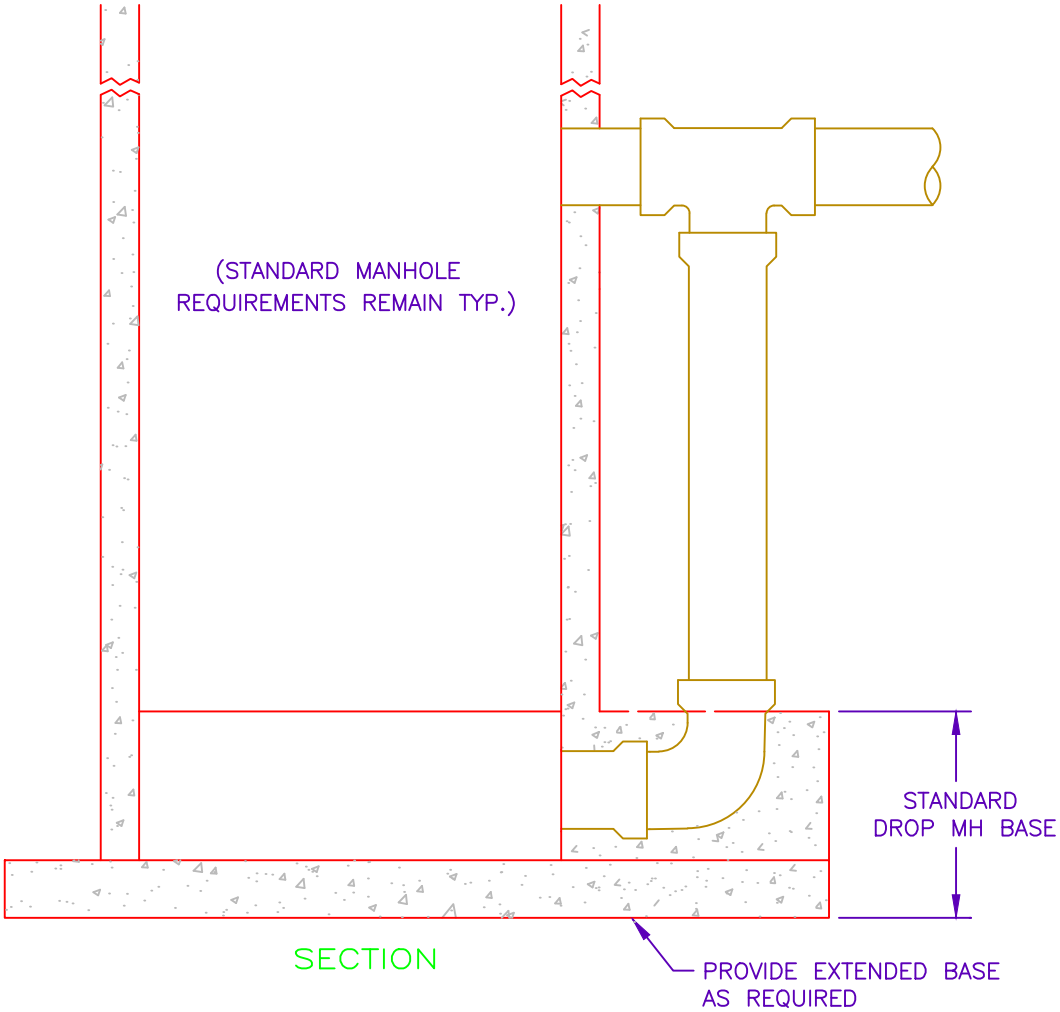

SECTION

RETURN TO TOC

THE CITY OF DAYTONA BEACH
UTILITIES DEPARTMENT

OUTSIDE DROP
SANITARY MANHOLE DETAIL
(NEW-STANDARD)
S-14

FY-15/16
Drawing Date: 01/08
Drawn By: KLH
Checked By: JMP
Scale: NTS
Revision Date:
File Name: Outside Drop New S-14
Page 82

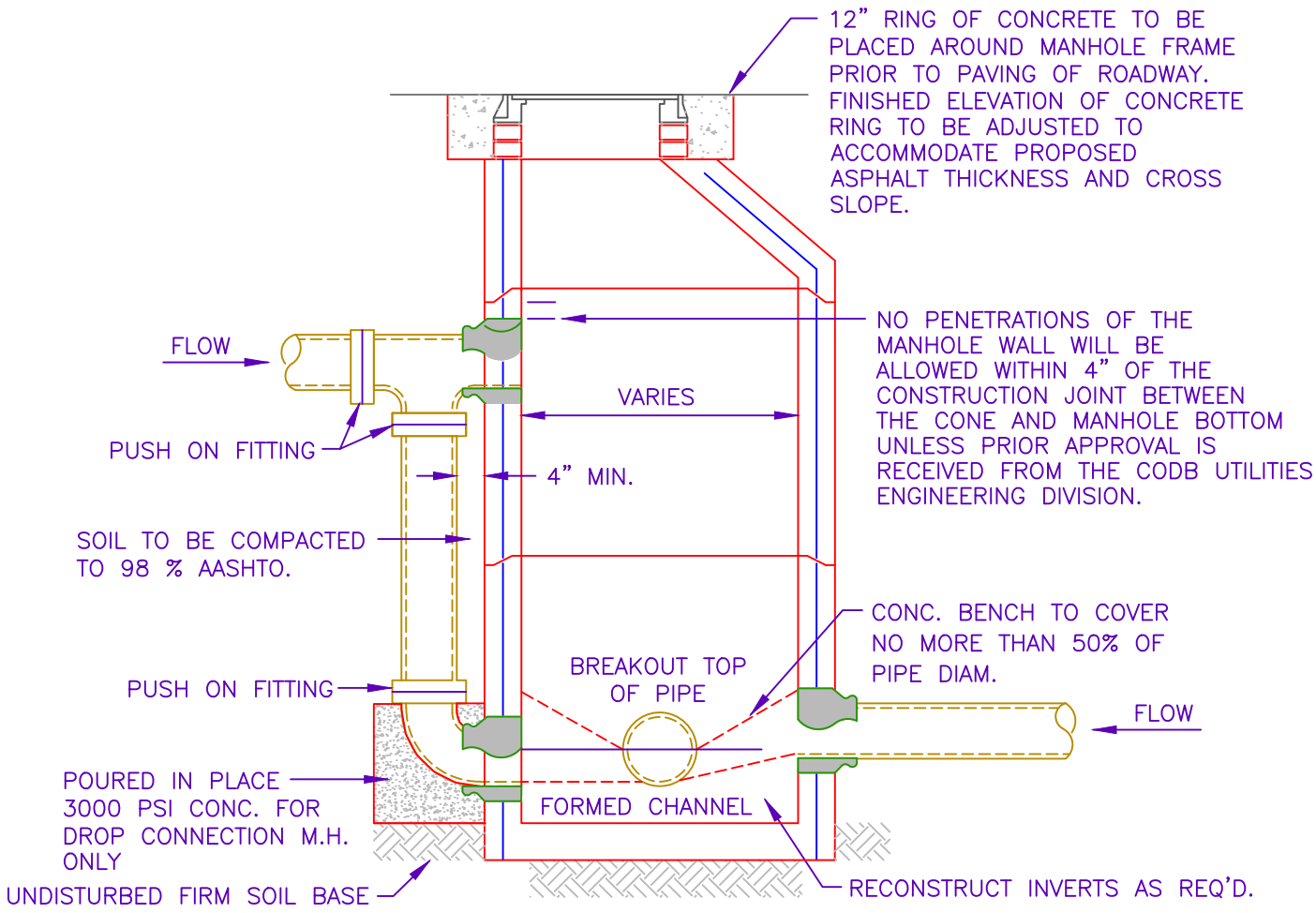

NOTE:

GENERAL NOTES ON DETAIL S-10 APPLY.

1. DROPS OF MORE THAN THREE FEET SHALL REQUIRE AN OUTSIDE DROP

RETURN TO TOC

THE CITY OF DAYTONA BEACH
UTILITIES DEPARTMENT

OUTSIDE DROP
SANITARY MANHOLE DETAIL
(EXISTING-RETROFIT)
S-15

FY-15/16	
Drawing Date:	01/08
Drawn By:	KLH
Checked By:	JMP
Scale:	NTS
Revision Date:	04/16
File Name:	Outside Drop Existing S-15

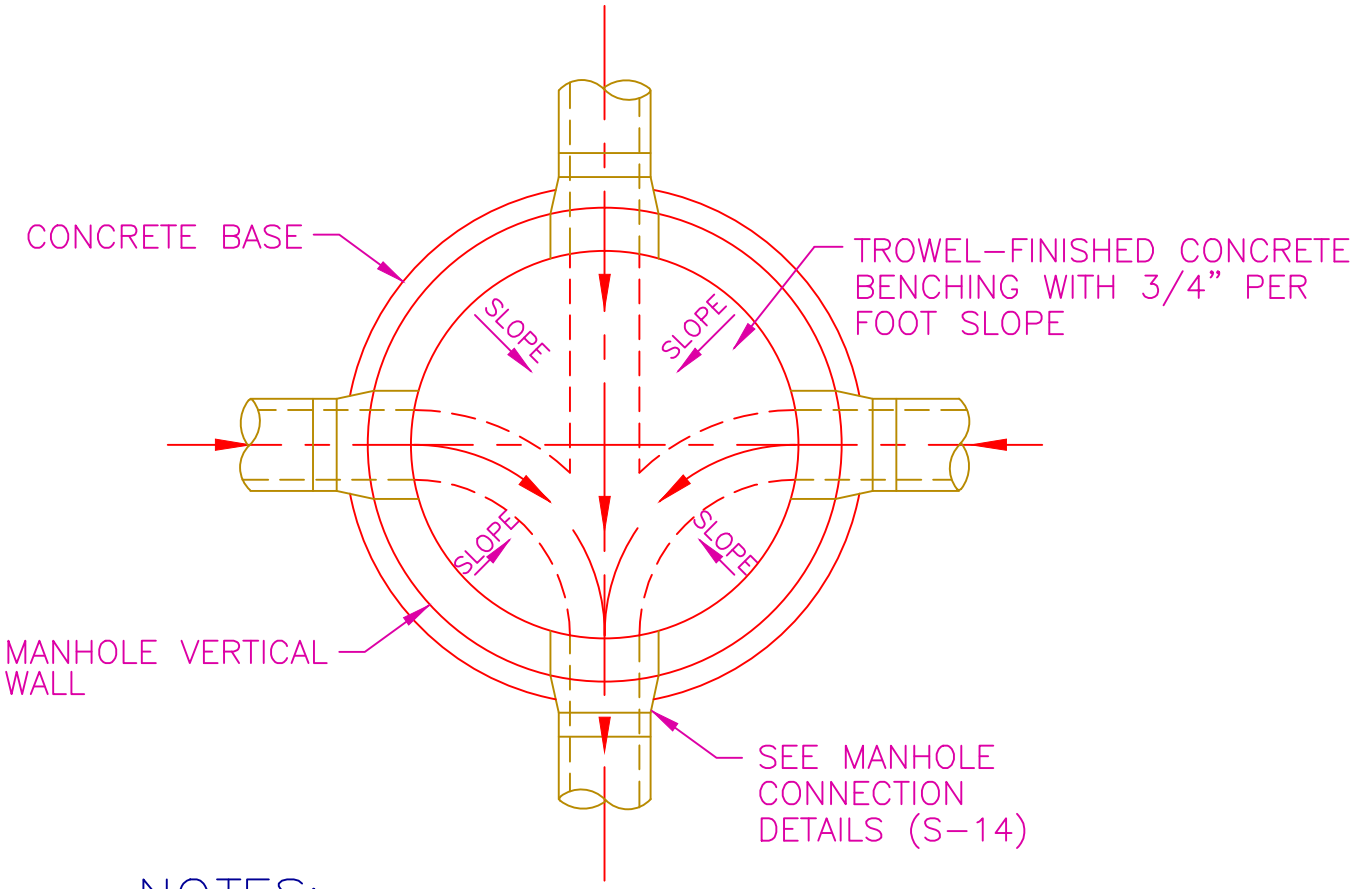

NOTES:

1. FLOW CHANNELS SHALL HAVE THE SAME SLOPES AS THE SEWERS THEY ARE CONNECTED TO. (EXCEPT THAT AT CHANGES OF DIRECTION EXCEEDING 45°, THE DROP SHALL BE 0.1' MINIMUM)
2. NO STANDING WATER WILL BE ALLOWED.
3. FORM BENCH IN MANHOLE FROM MID–LINE OF 8" PIPE TO WALL OF MANHOLE, 3/4" PER FT. OF SLOPE. FOR LARGER PIPE, CONSTRUCT FROM INSIDE CROWN OF PIPE WITH 3/4" PER FT. OF SLOPE TO WALL.

RETURN TO TOC

THE CITY OF DAYTONA BEACH
UTILITIES DEPARTMENT

SANITARY MANHOLE INVERT DETAIL

S–16

FY–15/16	
Drawing Date:	01/08
Drawn By:	KLH
Checked By:	JMP
Scale:	NTS
Revision Date:	07/10
File Name:	Invert Detail S–16
Page 84	

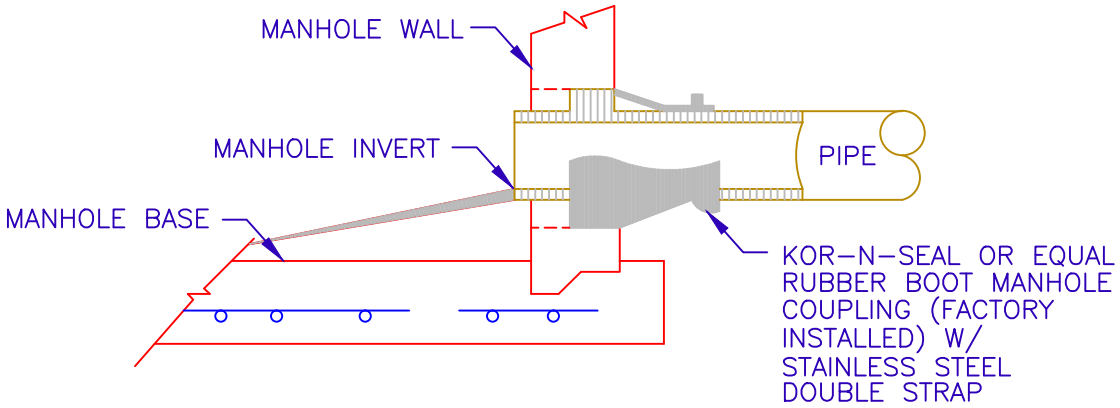

MANHOLE PIPE CONNECTION DETAIL
FOR NEW CONNECTIONS IN EXISTING MANHOLES

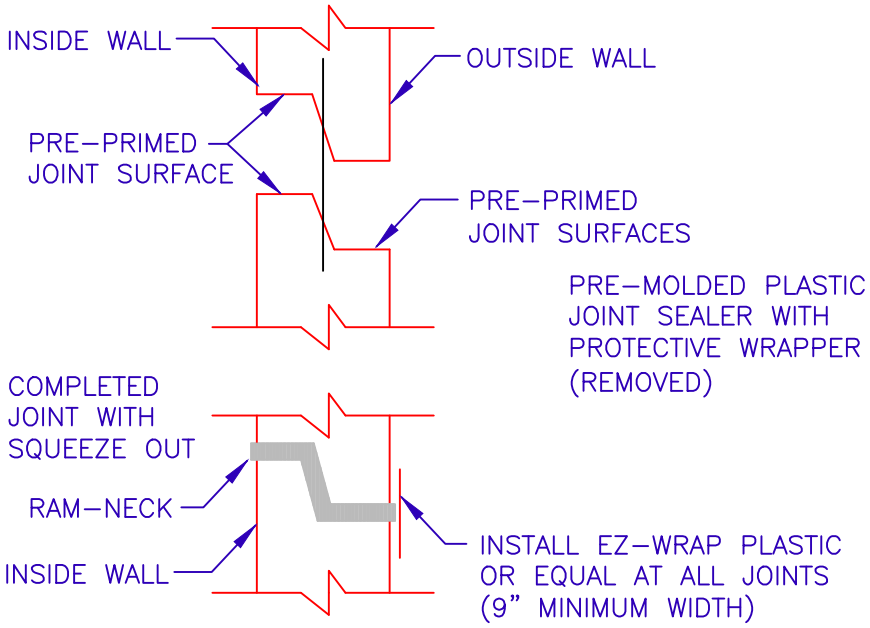

PRECAST JOINT CONNECTION

NOTES:

1. ALL NEW CONNECTIONS TO EXISTING SANITARY SEWER MANHOLES SHALL UTILIZE A CORING METHOD AND THE IN-FIELD INSTALLATION OF A RUBBER BOOT INTO THE MANHOLE.
2. BOOTS SHALL BE SNAPPED IN PLACE AND WATER TIGHT.

RETURN TO TOC

THE CITY OF DAYTONA BEACH
UTILITIES DEPARTMENT

RUBBER BOOT AND PRECAST JOINT CONNECTION DETAIL
S-17

FY-15/16	
Drawing Date: 01/08	
Drawn By: KLH	
Checked By: JMP	
Scale: NTS	
Revision Date:	
File Name: Rubber Boot and Precast Joint Connection S-17	
Page 85	

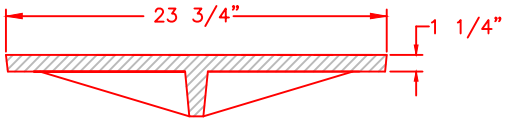

USF TYPE E MANHOLE COVER

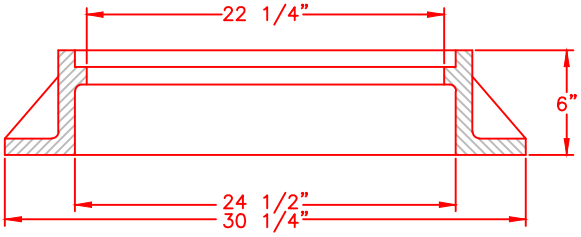

USF 170 MANHOLE RING

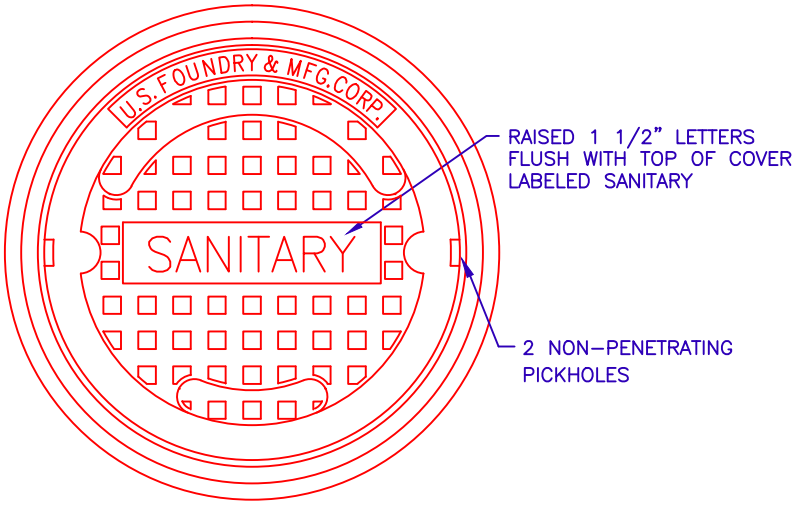

NOTES:

1. UNLESS DETAILED PLANS SHOW OTHERWISE, ALL MANHOLE RING AND COVER CASTINGS IN PAVED AREAS ARE TO BE ADJUSTED TO FINAL GRADE, SEALED AND SECURED IN PLACE WITH A CONCRETE COLLAR AFTER THE ROAD BASE IS PLACED AND JUST PRIOR TO PLACEMENT OF ASPHALT WEARING SURFACE.

2. CONCRETE COLLAR AROUND MANHOLE FRAME IS REQUIRED IN PAVED AREAS ONLY.

RETURN TO TOC

THE CITY OF DAYTONA BEACH
UTILITIES DEPARTMENT

SANITARY SEWER
COVER DETAIL
S-18

FY-15/16	
Drawing Date: 01/08	
Drawn By: KLH	
Checked By: JMP	
Scale: NTS	
Revision Date:	
File Name: Sanitary Sewer Cover S-18	
Page 86	

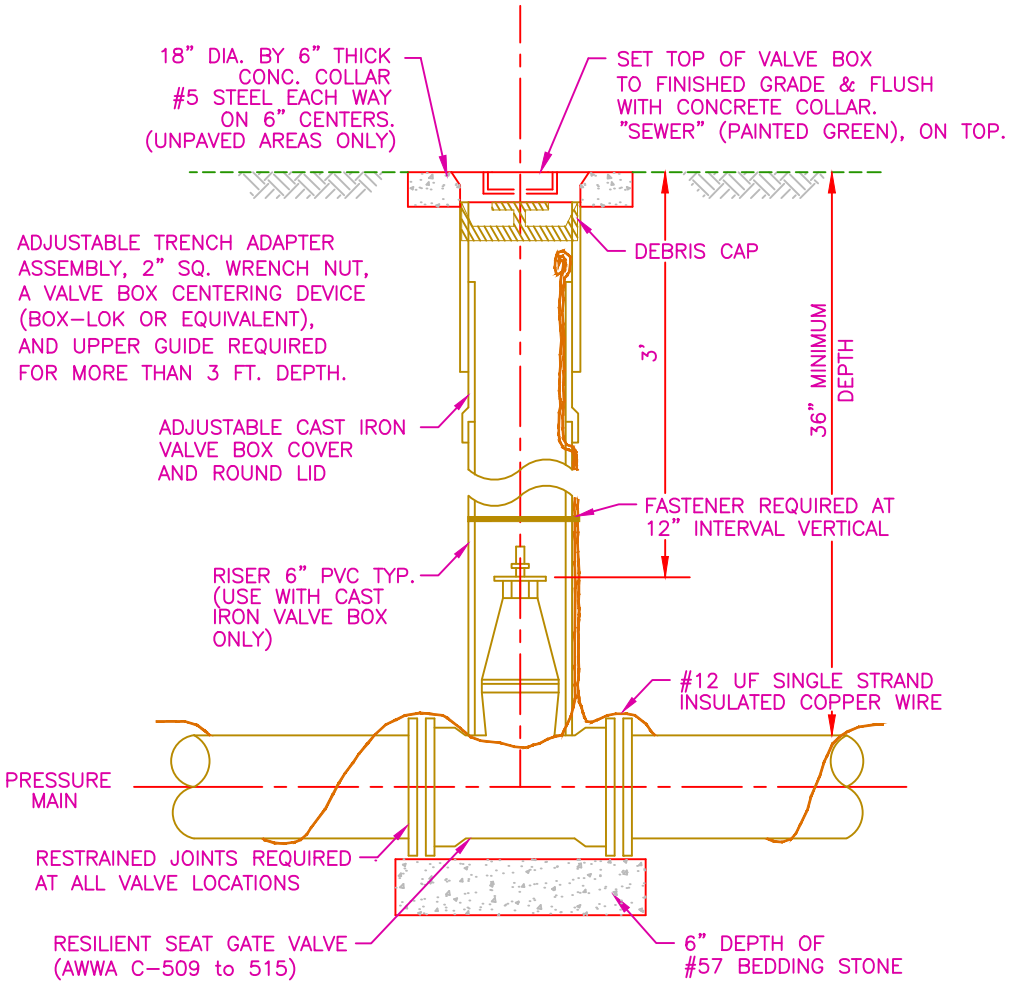

NTS

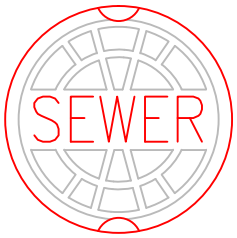

SEWER VALVE COVER

NOTES:

1. ROD OR BOLT TEE WHERE APPLICABLE.
2. FOR CONSTRUCTION PURPOSES, THE PLANS SHALL DIMENSION THE LOCATION OF ALL VALVES AND VALVE BOXES BY STATE PLANE COORDINATES WITH STATION & OFFSETS FROM CL OF R/W.
3. #12 INSULATED SOLID COPPER UF TRACER WIRE SHALL BE LAID THE ENTIRE LENGTH OF THE REUSE PIPE. ALL CONNECTION ENDS SHALL USE LIQUID TAPE AND A DIRECT BURIED SPLICE KIT (LAWSON 95313) OR EQUIVALENT.
4. ANY VALVE DEEPER THAN 36" SHALL HAVE AN EXTENSION BOLTED ON THE VALVE. THE OPERATING NUT SHALL BE 12" BELOW FINISHED GRADE.
5. WHERE PLUG VALVES ARE SPECIFIED THE CONCRETE COLLAR SURROUNDING THE TOP OF THE VALVE BOX SHALL HAVE AN ENGRAVED 2" x 6" BRASS NAME PLATE CLEARLY MARKED "PLUG VALVE" IN 1" HIGH BLOCK PRINT LETTERS.

RETURN TO TOC

THE CITY OF DAYTONA BEACH
UTILITIES DEPARTMENT

SANITARY VALVE AND VALVE BOX DETAIL
S-19

FY-15/16	
Drawing Date: 01/08	
Drawn By: KLH	
Checked By: JMP	
Scale: NTS	
Revision Date: 06/10	
File Name: Sanitary Valve & Box S-19	
Page 87	

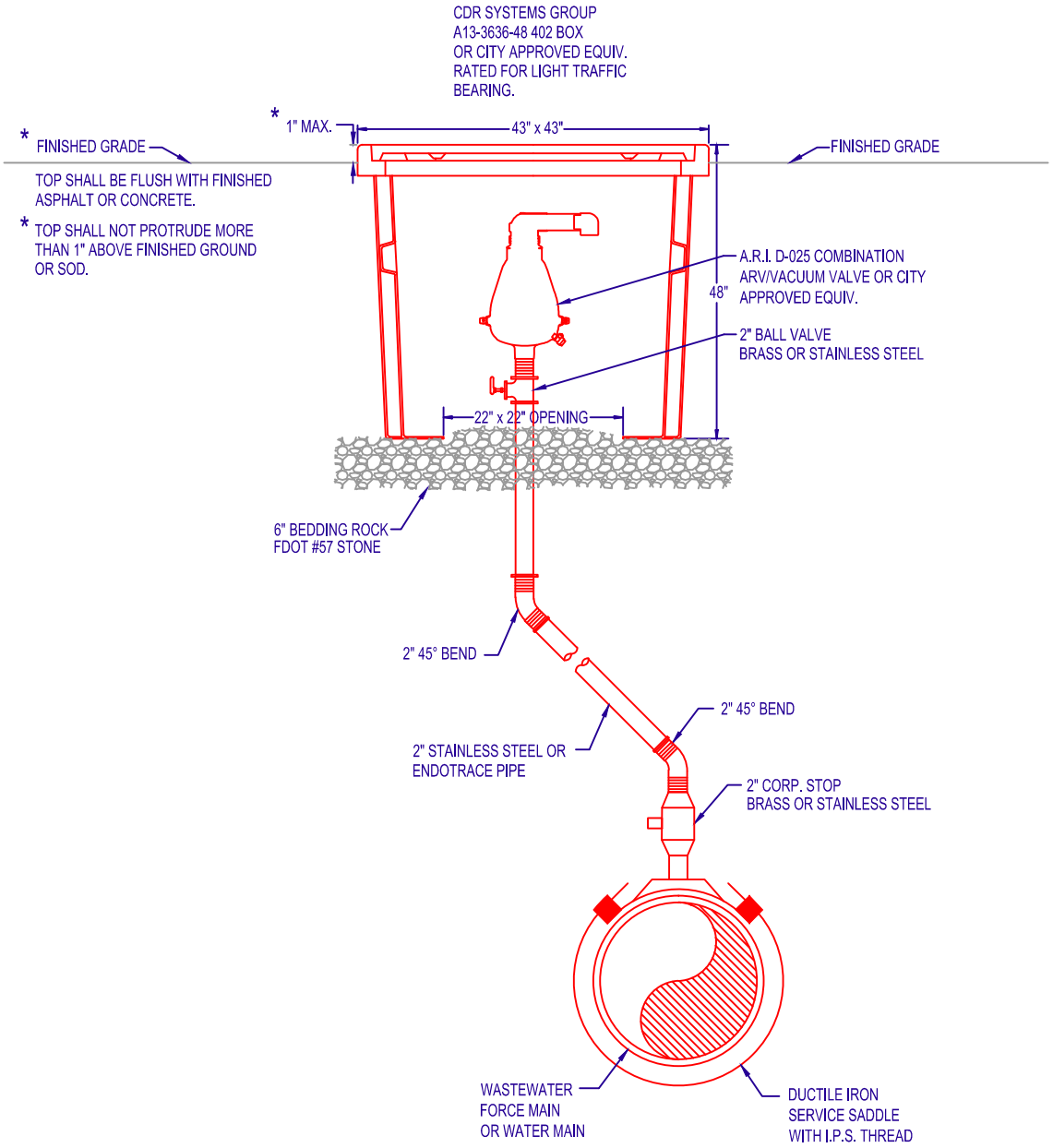

NOTES:

1. VALVES SHALL BE CENTERED IN THE BOX
2. ROCK SHALL BE COMPACTED TO A FIRM AND UNYIELDING CONDITION
3. PIPING BETWEEN THE VALVE AND MAIN SHALL BE CONFIGURED TO BEST FIT FOR THE SITE CONDITION AS APPROVED BY THE CITY
4. TOP OF BOX ON SANITARY FORCE MAIN SHALL BE CLEARLY PERMANENTLY LABELED AS SANITARY FM.
5. TOP OF ALL BOXES SHALL BE CLEARLY AND PERMANANTLY LABELED AS TO VALVE TYPE (AIR RELEASE, VACUUM, OR AIR/VAC COMBINATION).

OFFSET AIR/VAC RELEASE VALVE
NTS

RETURN TO TOC

THE CITY OF DAYTONA BEACH
UTILITIES DEPARTMENT

AUTOMATIC ARV/VACUUM VALVE DETAIL
(PAGE 1 OF 2)
S-20

FY-15/16
Drawing Date: 03/10
Drawn By: KLH
Checked By: JMP
Scale: NTS
Revision Date:
File Name: Automatic ARV Valve S-20

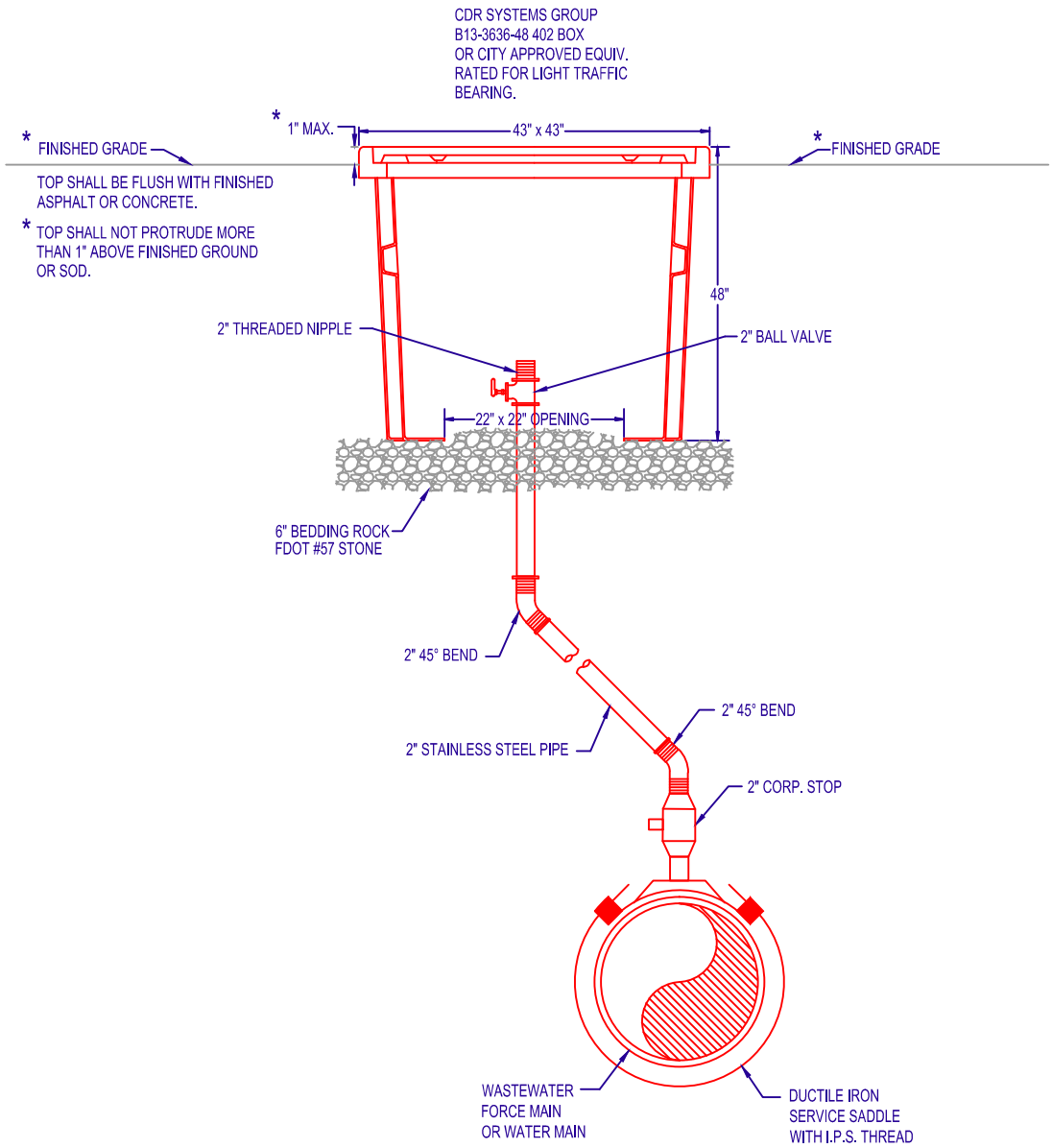

NOTES:

1. VALVES SHALL BE CENTERED IN THE BOX
2. ROCK SHALL BE COMPACTED TO A FIRM AND UNYIELDING CONDITION
3. PIPING BETWEEN THE VALVE AND MAIN SHALL BE CONFIGURED TO BEST FIT FOR THE SITE CONDITION AS APPROVED BY THE CITY
4. TOP OF BOX ON SANITARY FORCE MAIN SHALL BE CLEARLY PERMANENTLY LABELED AS SANITARY FM.
5. TOP OF ALL BOXES SHALL BE CLEARLY AND PERMANANTLY LABELED AS TO VALVE TYPE (AIR RELEASE, VACUUM, OR AIR/VAC COMBINATION).
6. IF BOX IS TO BE PLACED IN ROAD OR ADJACENT TO THE ROAD USE A HEAVY TRAFFIC BOX CDR SYSTEM GROUP, BOX # B14-3636-48 OR CITY APPROVED EQUIV. RATED FOR HEAVY TRAFFIC BEARING.

OFFSET AIR/VAC RELEASE VALVE
NTS

RETURN TO TOC

THE CITY OF DAYTONA BEACH
UTILITIES DEPARTMENT

MANUAL AIR RELEASE
VALVE DETAIL
S-21

FY-15/16
Drawing Date: 03/10
Drawn By: KLH
Checked By: JMP
Scale: NTS
Revision Date:
File Name: Manual Air Valve S-21
Page 89

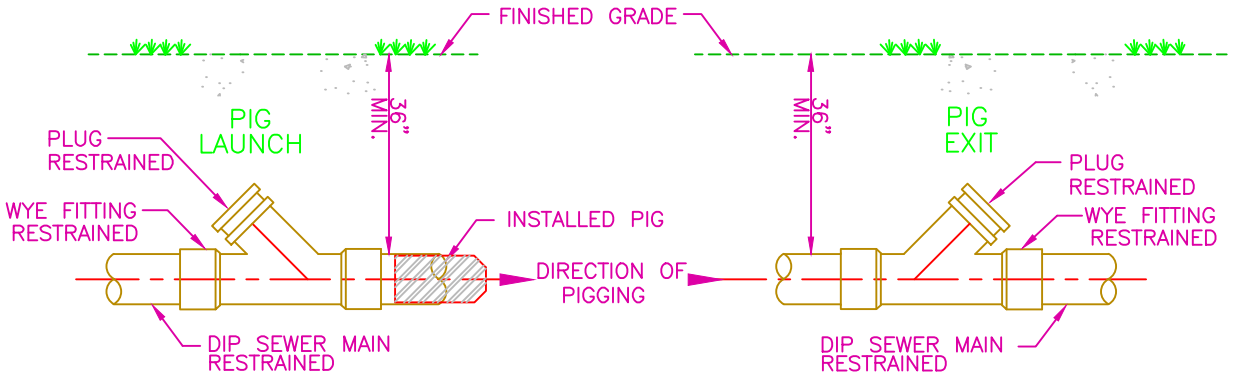

PROFILE VIEWS

RETURN TO TOC

THE CITY OF DAYTONA BEACH
UTILITIES DEPARTMENT

PIG LAUNCH AND RECEIVING DETAIL
S-22

FY: 15/16	
Drawing Date: 01/08	
Drawn By: KLH	
Checked By: JMP	
Scale: NTS	
Revision Date:	
File Name: Pic Launch S-22	
Page 90	

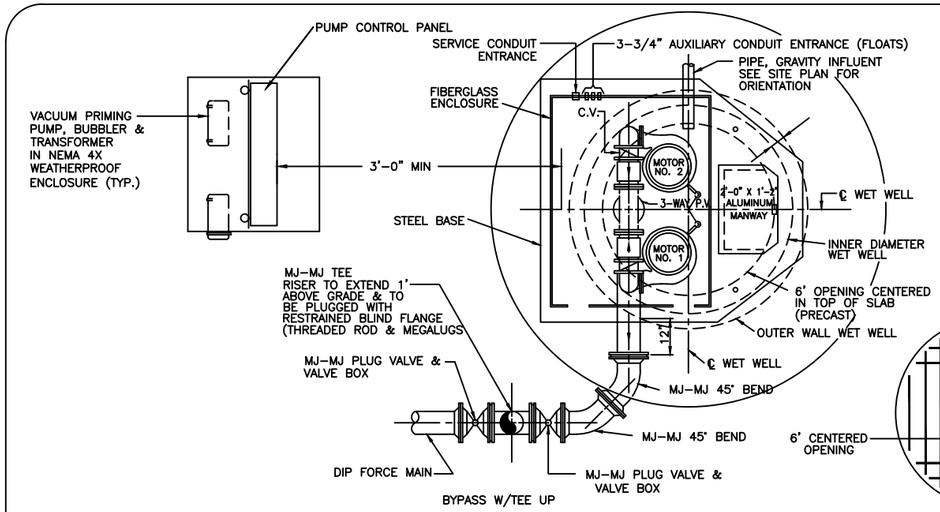

WET WELL PLAN VIEW
(6" DISCHARGE AND ABOVE. SEE NOTE 8)

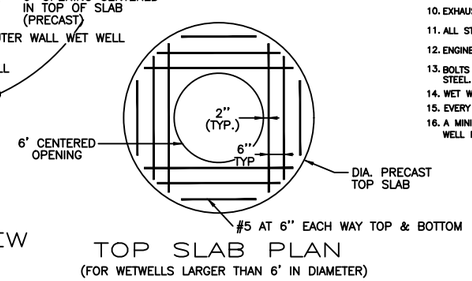

TOP SLAB PLAN
(FOR WETWELLS LARGER THAN 6' IN DIAMETER)

NOTES:

1. WET WELL TO BE LINED WITH AGRU-SURE FIBERGLASS LINING OR APPROVED EQUAL. 8 MILS EXTERNAL THICKNESS AND 16 MILS INTERNAL THICKNESS.
2. ELECTRICAL WIRE SHALL COMPLY WITH ALL APPLICABLE CODES.
3. CONTRACTOR SHALL MAINTAIN A BY-PASS PUMPING SYSTEM THROUGHOUT THIS PROJECT.
4. INSTALLATION OF PIPE INTO WET WELL: THE JOINING OF PIPE TO WET WELLS SHALL BE BY CASTING A SLEEVE INTO THE CENTER OF THE WET WELL WALL. THE SLEEVE SHALL BE A CONTINUOUS 4" RIB USED AS A WATER STOP AND COMPOSED OF EPDM SYNTHETIC RUBBER. THE RUBBER SLEEVE SHALL PROTRUDE AT LEAST 3 1/2" OUTSIDE OF THE WET WELL WALL. AFTER THE PIPE HAS BEEN INSTALLED INSIDE THE RUBBER SLEEVE, THE SLEEVE SHALL BE SECURED OVER THE PIPE BY A NON-MAGNETIC STAINLESS STEEL CLAMP TO PROVIDE WATERTIGHTNESS.
5. THE INTERIOR OF THE WET WELL SHALL BE ACID ETCHED WITH A 25% MURATIC ACID SOLUTION AND THEN NEUTRALIZED PRIOR TO INSTALLING THE FIBERGLASS LINER.
6. BACK FLOW PREVENTION ON WATER IS REQUIRED.
7. SUPPLY ONE PRESSURE TRANSMITTER #2088G1S22A1B4 FROM EMERSON PROCESS MANAGEMENT/ ROSEMOUNT INC. PHONE: 1-800-999-9307 FAX: 952-906-8811
8. ON 4" DISCHARGE, PROVIDE TWO (2) 2-WAY DISCHARGE PLUG VALVE.
9. GATOR-LINER RUBBERIZED COATING TO BE USED AT BASE OF LIFT STATION.
10. EXHAUST FAN GRAINGER MODEL NO. XXXXXXXXXXXXXXXXXXXX
11. ALL STAINLESS STEEL HARDWARE TO BE 316.
12. ENGINEER TO PROVIDE WETWELL VENTILATION DESIGN.
13. BOLTS AND NUTS IN WETWELL AND FOR DISCHARGE DRESSER COUPLING TO BE 316 STAINLESS STEEL.
14. WET WELLS SHALL BE A MINIMUM OF 8 FEET DIAMETER, WITH 8" WALLS.
15. EVERY LIFT STATION SHALL HAVE A SHOPPER PUMP OR A MUFFEN MONSTER.
16. A MINIMUM 6 FEET SHALL BE MAINTAINED BETWEEN THE LOWEST INFLUENT INVERT AND THE WET WELL FLOOR.

DESCRIPTION	PRESENT	FUTURE
WET WELL DIAMETER "A"		
DISCHARGE PIPING DIAMETER		
FORCE MAIN DIAMETER		
INFLUENT PIPE DIAMETER		
INFLUENT INVERT ELEVATION		
BOTTOM SLAB ELEVATION		
HIGH WATER ALARM ELEVATION		
LOW WATER ELEVATION		
LEAD PUMP ON ELEVATION		
LAG PUMP ON ELEVATION		
GROUND ELEVATION		
PUMP CAPACITY - GPM EACH		
TOTAL DYNAMIC HEAD - FEET		
MOTOR HORSEPOWER		
MAXIMUM RPM		

*NOTE: HP REQUIREMENTS MAY VARY WITH PUMP MANUFACTURER.

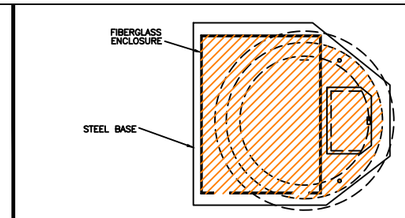

WET WELL PLAN VIEW

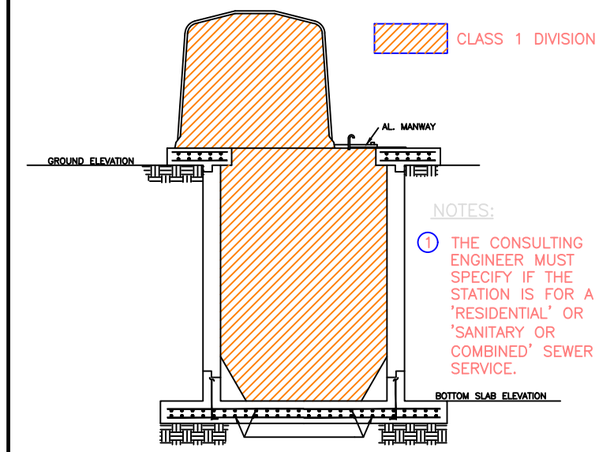

NOTES:

1. THE CONSULTING ENGINEER MUST SPECIFY IF THE STATION IS FOR A 'RESIDENTIAL' OR 'SANITARY OR COMBINED' SEWER SERVICE.

SECTION WET WELL
NFPA CLASSIFICATION BOUNDARY

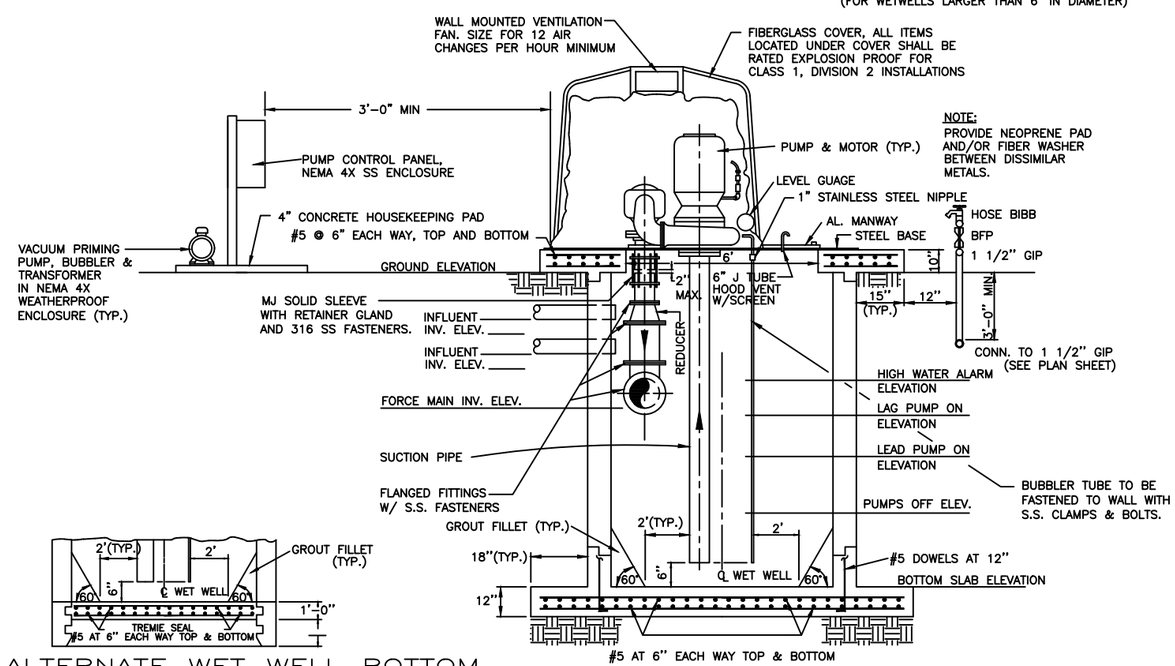

ALTERNATE WET WELL BOTTOM

SECTION WET WELL

NOTE:
PROVIDE NEOPRENE PAD AND/OR FIBER WASHER BETWEEN DISSIMILAR METALS.

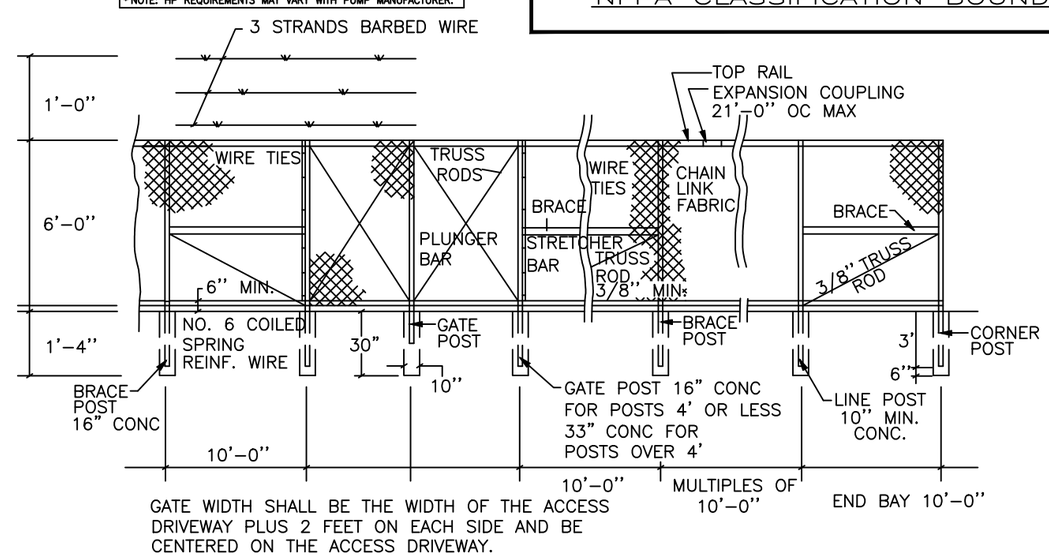

GATE WIDTH SHALL BE THE WIDTH OF THE ACCESS DRIVEWAY PLUS 2 FEET ON EACH SIDE AND BE CENTERED ON THE ACCESS DRIVEWAY.

FENCE DETAIL

NEXT

RETURN TO TOC

THE CITY OF DAYTONA BEACH
UTILITIES DEPARTMENT

THIS SHEET SHOWS THE MINIMUM INFORMATION AND THE BASIC OUTLINE OF FACILITIES REQUIRED. THIS DRAWING IS PROVIDED FOR INFORMATIONAL PURPOSES ONLY. A PROFESSIONAL ENGINEER SHALL BE REQUIRED TO CERTIFY ALL DETAILS.

WETWELL MOUNTED SANITARY OR COMBINED SEWER
LIFT STATION
STANDARD
DETAIL
S-23 (Sheet 1 of 7)

FY: 15/16	
Drawing Date: 01/08	
Drawn By: KLH	
Checked By: JMP	
Scale: NTS	
Revision Date: 07/10	
File Name: S-23 1 of 7	
Page 91	

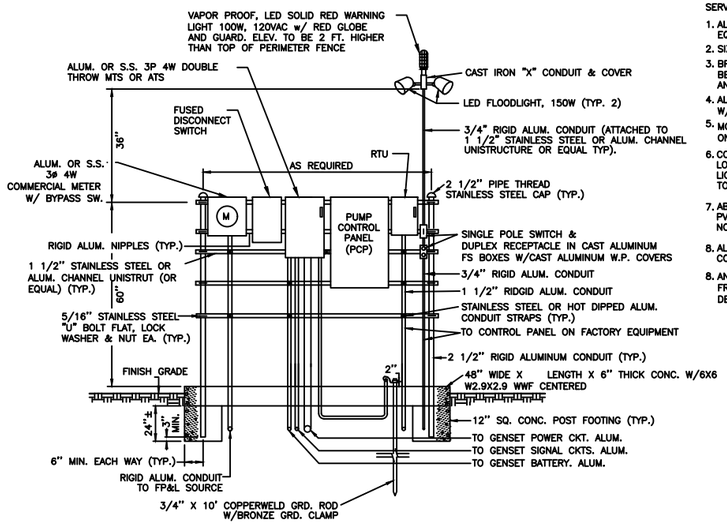

ELECTRICAL SERVICE PANEL RACK

SERVICE PANEL NOTES

1. ALL CONDUIT & FITTINGS WITHIN 12" OF EQUIPMENT PAD AND ABOVE GRADE TO BE RIGID ALUMINUM.
2. SIZE FUSES BY MANUFACTURER'S RECOMMENDATIONS.
3. BREAKERS, CONDUITS, WIRE & EQUIPMENT TO BE SIZED PER MANUFACTURER'S RECOMMENDATION AND/OR CODE REQUIREMENTS.
4. ALL MOUNTING HARDWARE STAINLESS STEEL W/FLAT, LOCK WASHERS & NUTS.
5. MOUNT BLACKBURN REMOTE TELEMETRY UNIT (RTI) ON SERVICE PANEL RACK AS SHOWN.
6. CONTRACTOR SHALL SUBMIT SIGNED AND SEALED WIND LOAD CALCULATIONS FROM A STRUCTURAL ENGINEER LICENSED IN THE STATE OF FLORIDA. SERVICE PANEL RACK TO BE CERTIFIED PER THE FLORIDA BUILDING CODE.
7. ABOVE GRADE ALUMINUM CONDUIT TO BE TRANSITIONED TO PVC SCHEDULE 80 BELOW GRADE. THIS APPLIES FOR NON-SIGNAL CONDUITS.
8. ALL CONTROL PANELS SHALL BE U.L. LABELED AND SHALL COMPLY WITH ARTICLE 409 OF THE N.E.C.
8. AN ESSEX PHONE LINE MUST BE PROVIDED WITH ALL RTU FROM AT&T. ALSO MUST COORDINATE WITH THE CITY'S IT DEPARTMENT ABOUT PHONE INFORMATION.

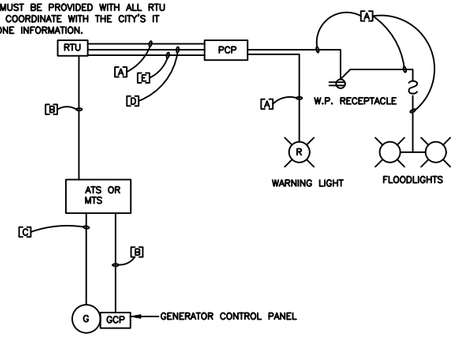

[A]=[3/4"C., 2#12,1#12G] AC POWER, 120 V.
[B]=[3"C., 4#14, 1#12G.] SIGNAL CKTS, GENSET TO RTU & ATS
[C]=[3/4"C., 2#12 & 1#12GND FOR BATTERY CHARGER] & [1"C., 2#10 & 1#10GND FOR JACKET WATER HEATER]
[D]=[1"C., 10#14, 1#14G] STATUS SIGNALS, PCP TO RTU
[E]=[1"C., 2#16 TWISTED SHIELDED PAIR] ANALOG SIGNALS, PCP TO RTU

120V & SIGNAL RISER DIAGRAM

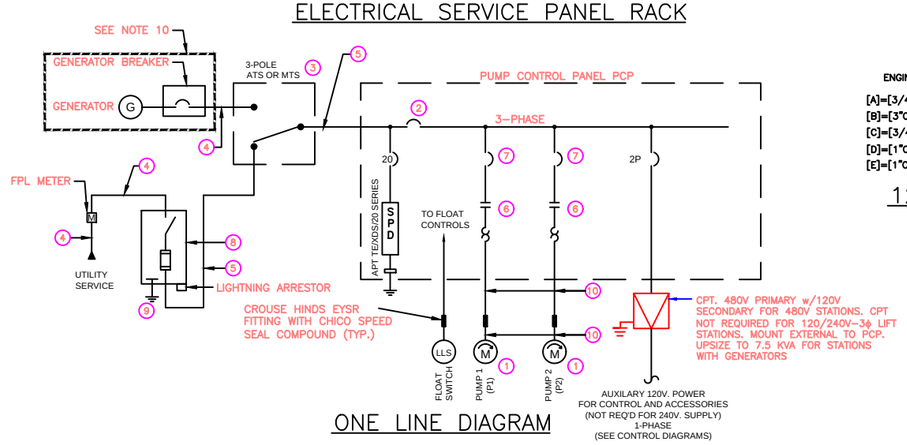

ONE LINE DIAGRAM

1 PROPOSED VOLTAGE	2 PROPOSED MOTOR SIZE (HP)	3 PANEL MAIN BKR.	4 MTS OR ATS	5 SERVICE CONDUIT & CONDUCTORS	6 LOAD CONDUIT & CONDUCTORS	8 STARTER SIZE	7 MOTOR BREAKER	8 FUSED DISC/FUSES (SEE NOTES)	9 GROUND	10 PUMP CABLE CONDUIT SIZE
480V, 3ø, 3W	50HP ≥ 25 HP	200A,3P	200A,3P	4#3/0-2"	3#3/0 & 1#4GND-2"	3	125A,3P	200A,3P/200A	#2	PER N.E.C
480V, 3ø, 3W	10HP ≤ X < 25 HP	200A,3P	200A,3P	4#3/0-2"	3#3/0 & 1#4GND-2"	2	70A,3P	200A,3P/200A	#2	PER N.E.C
480V, 3ø, 3W	X < 10 HP	200A,3P	200A,3P	4#3/0-2"	3#3/0 & 1#4GND-2"	1	30A,3P	200A,3P/200A	#2	PER N.E.C
240V, 3ø, 3W	15HP ≤ X ≤ 20 HP	200A,3P	200A,3P	4#3/0-2"	3#3/0 & 1#4GND-2"	3	125A,3P	200A,3P/200A	#2	PER N.E.C
240V, 3ø, 3W	7.5HP ≤ X < 15 HP	100A,3P	100A,3P	4#2-1 1/2"	3#2 & 1#6GND-1 1/2"	2	80A,3P	100A,3P/100A	#6	PER N.E.C
240V, 3ø, 3W	X < 7.5 HP	100A,3P	100A,3P	4#2-1 1/2"	3#2 & 1#6GND-1 1/2"	1	50A,3P	100A,3P/100A	#6	PER N.E.C

NOTE: SOLID STATE SOFT STARTERS SHALL BE PROVIDED FOR MOTOR SIZES ABOVE 50 HP.

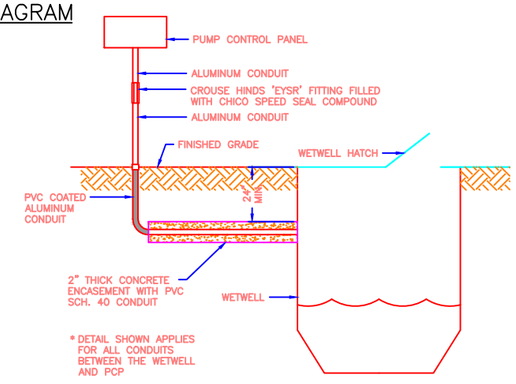

CONDUIT INSTALLATION DETAIL

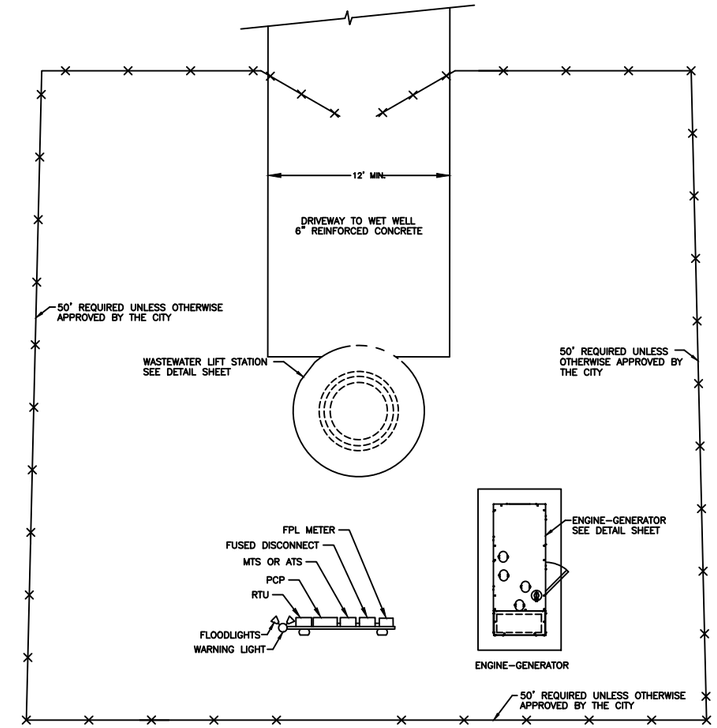

TYPICAL SITE PLAN

GENERAL NOTES:

1. PROVIDE ELECTRICAL SERVICE PANEL RACK CONFIGURED WITH ELECTRICAL DISTRIBUTION EQUIPMENT, EMERGENCY POWER AUTOMATIC TRANSFER SWITCH (ATS), REMOTE TERMINAL UNIT, AND APPURTENANCES AS SHOWN.
2. ALL CONDUCTORS SHALL BE STRANDED COPPER WITH THHN INSULATION FOR CIRCUITS UNDER 600 VOLTS.
3. ALL MOUNTING HARDWARE SHALL BE STAINLESS STEEL.
4. UNDERGROUND CONDUITS SHALL BE INSTALLED WITH 24 INCHES OF COVER, MINIMUM.
5. PROVIDE ONE COPPER-CLAD GROUND ROD, 5/8 INCHES BY 10 FEET AND ONE #6 BARE COPPER CONDUCTOR FROM GROUND ROD TO GROUND LUG OR BUS AT EACH OF THREE LOCATIONS: ENGINE-GENERATOR, PUMP STATION, AND ELECTRICAL SERVICE PANEL RACK.
6. ALL OUTDOOR ENCLOSURES SHALL BE FACTORY PAINTED WHITE, NEMA 4X, 304 STAINLESS STEEL OR BETTER. ENCLOSURES UNDER THE PUMP HOUSE ENCLOSURE SHALL BE NEMA 4X 304 STAINLESS STEEL PROVIDED BY THE PUMP SUPPLIER AS A PART OF THE PUMP PACKAGE. THE CONTROL PANEL SHALL CONTAIN STARTERS AND OTHER DEVICES FOR THE WASTEWATER PUMPS, PRIMING PUMPS, BUBBLER SYSTEM, AND APPURTENANCES. THE PANEL SHALL ALSO PROVIDE 120 V POWER FOR THE LIGHTING, RECEPTACLE, AND OTHER MISCELLANEOUS NEEDS OF THE SITE.
7. ALL WORK SHALL BE PERFORMED IN ACCORDANCE WITH THE FLORIDA BUILDING CODE, AND THE NATIONAL ELECTRIC CODE.
8. NO FENCE IS REQUIRED ON LS IN RESIDENTIAL SUBDIVISIONS. ALL INDUSTRIAL AND COMMERCIAL APPLICATIONS SHALL BE FENCED.
9. CONTRACTOR TO PROVIDE SHOP DRAWINGS FOR REVIEW AND APPROVAL.
10. GENERATOR AND GENERATOR BREAKER SHALL BE SIZED TO ACCOMMODATE THE TOTAL CONNECTED LOAD. THE GENERATOR SHALL NOT EXCEED 80% OF ITS RUNNING CAPACITY WITH ALL CONNECTED LOADS ON-LINE. ENGINEER SHALL BE RESPONSIBLE FOR THE SIZING OF THE GENERATOR. THE SIZING OF THE GENERATOR PAPERWORK SHALL BE SIGNED AND SEALED BY AN ELECTRICAL ENGINEER.

NEXT PREV

RETURN TO TOC

THE CITY OF DAYTONA BEACH
UTILITIES DEPARTMENT

THIS SHEET SHOWS THE MINIMUM INFORMATION AND THE BASIC OUTLINE OF FACILITIES REQUIRED. THIS DRAWING IS PROVIDED FOR INFORMATIONAL PURPOSES ONLY. A PROFESSIONAL ENGINEER SHALL BE REQUIRED TO CERTIFY ALL DETAILS.

WETWELL MOUNTED SANITARY OR COMBINED SEWER
LIFT STATION
CONTROL & RTU
DIAGRAMS
S-23 (Sheet 2 of 7)

FY-15/16	
Drawing Date:	01/16/13
Drawn By:	KLH
Checked By:	JMP
Scale:	NTS
Revision Date:	07/10
File Name:	S-23 2 of 7
Page	92

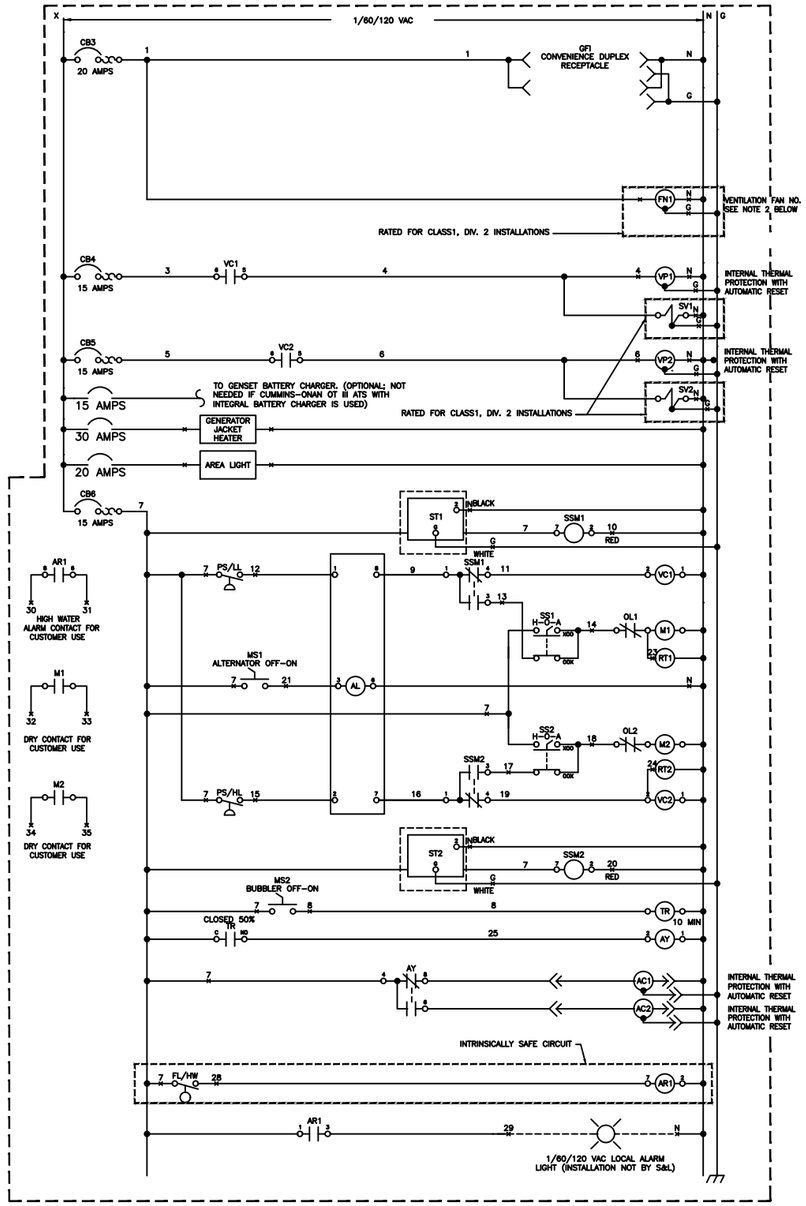

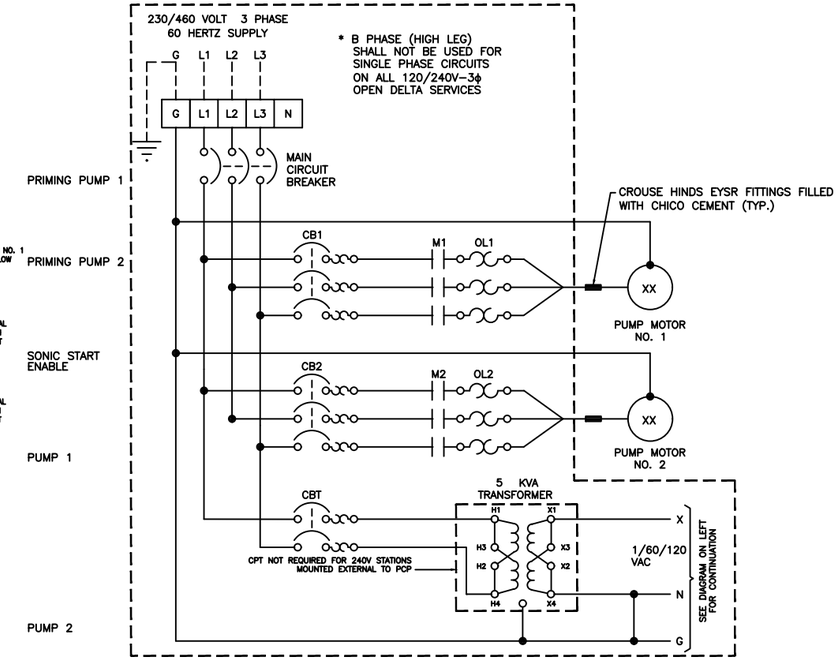

PRIMING PUMP 1

PRIMING PUMP 2

SONIC START ENABLE

PUMP 1

PUMP 2

SONIC START ENABLE

ALTERNATOR TIMER TO EQUALIZE WEAR

BUBBLER AIR COMPRESSORS

HIGH LEVEL BEACON

LEGEND

A	ALARM LIGHT OR HORN	SS2	SELECTOR SWITCH; MTR. NO.2 HAND-OFF-AUTO
AL	PUMP ALTERNATOR	SV1	SOLENOID VALVE NO.1
ALR	ALTERNATOR CONTROL RELAY	SV2	SOLENOID VALVE NO.2
CB1	CIRCUIT BREAKER; MOTOR NO.1	ST1	SONIC START LEVEL SWITCH
CB2	CIRCUIT BREAKER; MOTOR NO.2	ST2	SONIC START LEVEL SWITCH
CB3	CIRCUIT BREAKER; AUXILIARY EQUIPMENT	SSM1	SONIC START MODULE
CB4	CIRCUIT BREAKER; VACUUM PUMP NO.1	SSM2	SONIC START MODULE
CB5	CIRCUIT BREAKER; VACUUM PUMP NO.2	T1	HEATER THERMOSTAT
CB6	CIRCUIT BREAKER; CONTROL	T2	FAN THERMOSTAT
ER1	ELECTRODE RELAY; PUMP NO.1	TC	TIMED CLOSING CONTACT
ER2	ELECTRODE RELAY; PUMP NO.2	VC1	VACUUM CONTACTOR; NO.1 PRIMING SYSTEM
FN	FAN	VC2	VACUUM CONTACTOR; NO.2 PRIMING SYSTEM
FS/HL	FLOAT SWITCH; HIGH LEVEL ALARM	VP1	VACUUM PUMP NO.1
FS/OFF	FLOAT SWITCH; PUMPS OFF	VP2	VACUUM PUMP NO.2
GFI	GROUND FAULT INTERRUPT		
HTR	HEATER		
M1	MOTOR STARTER NO.1		
M2	MOTOR STARTER NO.2		
MS1	MANUAL SWITCH; PUMP ALTERNATOR		
OL1	OVERLOAD RELAY; NO.1 MOTOR STARTER		
OL2	OVERLOAD RELAY; NO.2 MOTOR STARTER		
RT1	RUNNING (ELAPSED) TIME METER; NO.1 PUMP		
RT2	RUNNING (ELAPSED) TIME METER; NO.2 PUMP		
SS1	SELECTOR SWITCH; MTR. NO.1 HAND-OFF-AUTO		

—×— TERMINAL BLOCK CONNECTION (DENOTES CONDUCTOR ENTERING OR LEAVING ENCLOSURE.)

TYPICAL EXAMPLE
PUMP STATION CONTROL PANEL

NOTES:

1. CONTROL DIAGRAMS SHOWN ARE BASED UPON INFORMATION PROVIDED FROM LIFT STATION SUPPLIER AND RTU SUPPLIER AS PROVIDED FOR CITY OF DAYTONA BEACH PROJECTS.
2. SIZED FOR 12 AIR CHANGES PER HOUR, MINIMUM. FAN RUNS CONTINUOUS.
3. COMPONENT SPECIFICATIONS:
   - RENA 301 AIR COMPRESSOR
   - COMPOUND PRESSURE GAUGE w/DIAPHRAM SEAL FOR EACH PUMP
   - ALLEN BRADLEY NEMA RATED STARTERS
   - ALTERNATOR – TIME MARK DX261 OR EQUAL
   - ALLEN BRADLEY 836 PRESSURE SWITCHES
   - AIR BLOWER – ITDR3 GRAINGER

NEXT PREV RETURN TO TOC

THE CITY OF DAYTONA BEACH
UTILITIES DEPARTMENT

THIS SHEET SHOWS THE MINIMUM INFORMATION AND THE BASIC OUTLINE OF FACILITIES REQUIRED. THIS DRAWING IS PROVIDED FOR INFORMATIONAL PURPOSES ONLY. A PROFESSIONAL ENGINEER SHALL BE REQUIRED TO CERTIFY ALL DETAILS.

WETWELL MOUNTED SANITARY OR COMBINED SEWER
LIFT STATION
CONTROL & RTU
DIAGRAMS
S-23 (Sheet 3 of 7)

FY-15/16	
Drawing Date:	01/08
Drawn By:	KLH
Checked By:	JMP
Scale:	NTS
Revision Date:	04/16
File Name:	S-23 3 of 7
Page 93	

LSPro - Daytona Monitor ONLY

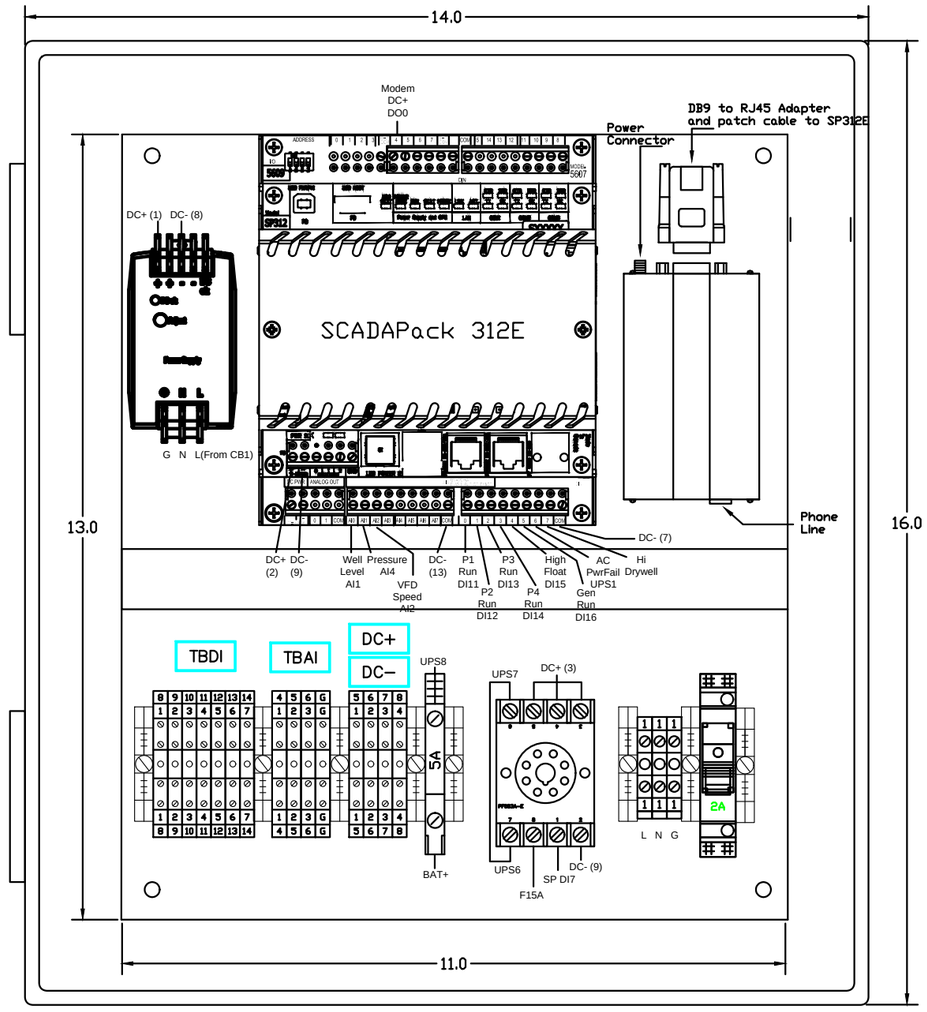

DATE	REVISION	BY	CH'D
5/26/2015	SHOP DRAWINGS	PS	

Copyright 2016 BCI Technologies All Rights Reserved - LSMonitor

BCI TECHNOLOGIES

The information, specifications and data contained in this drawing are furnished by and are to remain the property of BCI Technologies. The acceptor warrants that no use will be made of the same except to facilitate the installation, maintenance and operation of the equipment represented by said drawing.

TOLERANCES (UNLESS OTHERWISE SPECIFIED)

CUSTOMER: CITY OF DAYTONA BEACH

TITLE: LIFT STATION RTU w/SP312E

SCALE:	DRAWN BY:	CHECKED BY:	APP'D BY:
N/A	JB		
DATE: 3/21/2014	SHEET 1 OF SHEETS	DRAWING NO. LS-Monitor-PL-001-03 with SP312E	

THE CITY OF DAYTONA BEACH
UTILITIES DEPARTMENT

THIS SHEET SHOWS THE MINIMUM INFORMATION AND THE BASIC OUTLINE OF FACILITIES REQUIRED. THIS DRAWING IS PROVIDED FOR INFORMATIONAL PURPOSES ONLY. A PROFESSIONAL ENGINEER SHALL BE REQUIRED TO CERTIFY ALL DETAILS.

WETWELL MOUNTED SANITARY OR COMBINED SEWER
LIFT STATION
RTU W/SP312E
DIAGRAMS
S-23 (Sheet 4 of 7)

FY-15/16
Drawing Date: 03/14
Drawn By: KLH
Checked By: JMP
Scale: NTS
Revision Date:
File Name: S-23 4 of 7
Page 94

LSPro - Daytona Monitor ONLY

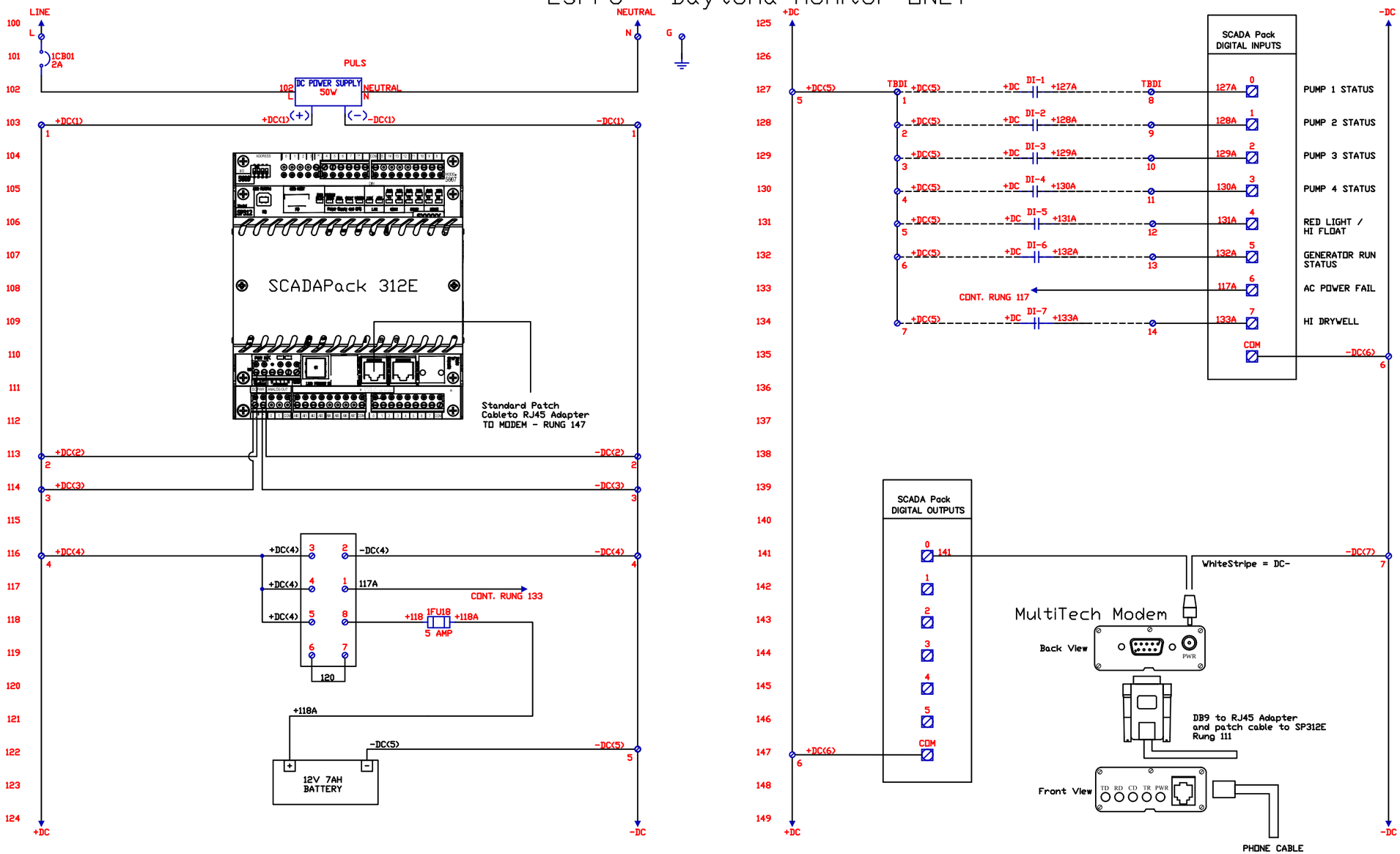

DATE	REVISION	BY	CH'D
5/26/2015	SHOP DRAWINGS	PS	
	Copyright 2016 BCI Technologies All Rights Reserved - LSMonitor		

BCI TECHNOLOGIES

The information, specifications and data contained in this drawing are furnished by and are to remain the property of BCI Technologies. The acceptor warrants that no use will be made of the same except to facilitate the installation, maintenance and operation of the equipment represented by said drawing.

TOLERANCES UNLESS OTHERWISE SPECIFIED

CUSTOMER: CITY OF DAYTONA BEACH

TITLE: LIFT STATION RTU w/SP312E

SCALE	DRAWN BY	CHECKED BY	APP'D BY
N/A	JB		
DATE	SHEET	OF SHEETS	DRAWING NO.
3/21/2014	1		40067-EE-001-01 with SP312E

THE CITY OF DAYTONA BEACH
UTILITIES DEPARTMENT

THIS SHEET SHOWS THE MINIMUM INFORMATION AND THE BASIC OUTLINE OF FACILITIES REQUIRED. THIS DRAWING IS PROVIDED FOR INFORMATIONAL PURPOSES ONLY. A PROFESSIONAL ENGINEER SHALL BE REQUIRED TO CERTIFY ALL DETAILS.

WETWELL MOUNTED SANITARY OR COMBINED SEWER
LIFT STATION
RTU W/SP312E
DIAGRAMS
S-23 (Sheet 5 of 7)

FY-15/16	
Drawing Date:	03/14
Drawn By:	KLH
Checked By:	JMP
Scale:	NTS
Revision Date:	
File Name:	S-23 5 of 7
Page	95

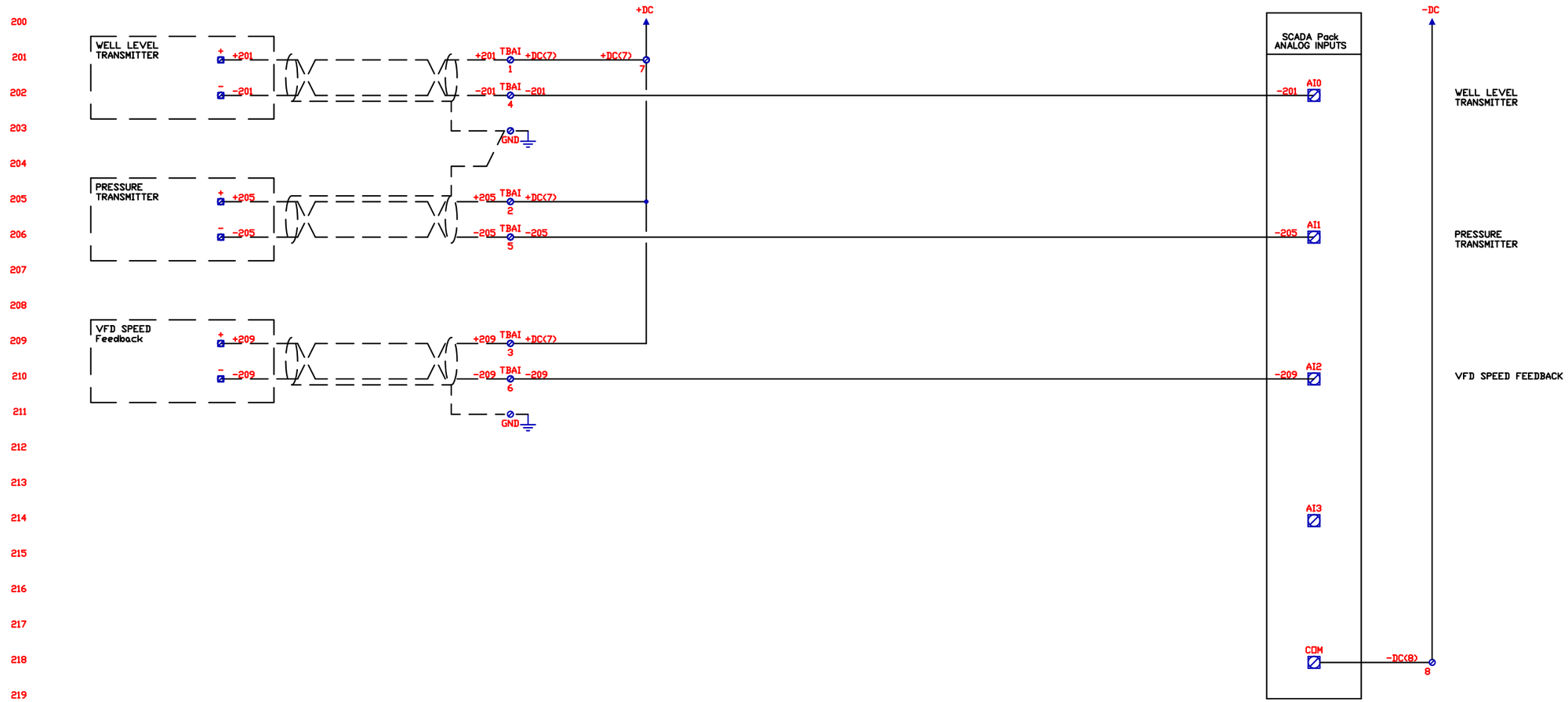

DATE	REVISION	BY	CH'D
5/26/2015	SHOP DRAWINGS	PS	

Copyright 2016 BCI Technologies All Rights Reserved - LSMonitor

BCI TECHNOLOGIES

The information, specifications and data contained in this drawing are furnished by and are to remain the property of BCI Technologies. The acceptor warrants that no use will be made of the same except to facilitate the installation, maintenance and operation of the equipment represented by said drawing.

TOLERANCES (UNLESS OTHERWISE SPECIFIED)

CUSTOMER: CITY OF DAYTONA BEACH

TITLE: LIFT STATION RTU wSP312E

SCALE:	DRAWN BY:	CHECKED BY:	APP'D BY:
N/A	JB		
DATE: 3/21/2014	SHEET 2 OF SHEETS 2	DRAWING NO. 40067-EE-002-01 with SP312E	

NEXT PREV

RETURN TO TOC

THE CITY OF DAYTONA BEACH
UTILITIES DEPARTMENT

THIS SHEET SHOWS THE MINIMUM INFORMATION AND THE BASIC OUTLINE OF FACILITIES REQUIRED. THIS DRAWING IS PROVIDED FOR INFORMATIONAL PURPOSES ONLY. A PROFESSIONAL ENGINEER SHALL BE REQUIRED TO CERTIFY ALL DETAILS.

WETWELL MOUNTED SANITARY OR COMBINED SEWER
LIFT STATION
RTU W/SP312E
DIAGRAMS
S-23 (Sheet 6 of 7)

FY-15/16
Drawing Date: 03/14
Drawn By: KLH
Checked By: JMP
Scale: NTS
Revision Date:
File Name: S-23 6 of 7
Page 96

ENGINE–GENERATOR SYSTEM

PROVIDE A COMPLETE FACTORY ASSEMBLED ENGINE–GENERATOR UNIT TO PROVIDE AUTOMATIC STANDBY ELECTRICAL POWER FOR THE PUMPING STATION. AN AUTOMATIC TRANSFER SWITCH (ATS) SHALL ALSO BE PROVIDED TO SENSE LOSS OF UTILITY POWER AND TO INITIATE AUTOMATIC START OF THE ENGINE–GENERATOR UNIT AND THE TRANSFER OF POWER FROM THE UTILITY FEED. ALSO PROVIDE DRY CONTACT ENGINE START ENABLE TO RECEIVE A RUN SIGNAL UPON HIGH WETWELL LEVEL FROM LEVEL FLOAT IN LIFT STATION. ~~PROVIDE CONTACTS IN THE ENGINE–GENERATOR CONTOL PANEL TO SIGNAL COOLDOWN/SHUTDOWN UPON LOW LEVEL IN PUMP STATION FROM LIFT PUMP LOW LEVEL SHUTOFF.~~

PROVIDE COMPLETE ENGINE FUEL SYSTEM, ELECTRONIC GOVERNOR SYSTEM, ENGINE COOLING SYSTEM, ELECTRIC STARTING SYSTEM COMPLETE WITH BATTERIES AND CHARGING SYSTEM, EXHAUST SYSTEM WITH SILENCER, VIBRATION ISOLATION SYSTEM, DIGITAL (MICROPROCESSOR–BASED) ELECTRONIC CONTROLS, OUTPUT METERING (RMS VOLTAGE, CURRENT, FREQUENCY, POWER FACTOR, AND KW HOURS), SOUND–INSULATED OUTDOOR WEATHER–PROOF ENCLOSURE, AND OTHER REQUIRED APPURTENANCES, ALL OF WHICH SHALL BE MOUNTED ON A HEAVY–DUTY STEEL BASE WHICH SHALL BE FIELD MOUNTED ON A CAST IN PLACE CONCRETE FOUNDATION AS SHOWN.

THE ENGINE SHALL BE A DIESEL FUELED, RADIATOR AND FAN COOLED. MINIMUM DISPLACEMENT SHALL BE 256 CUBIC INCHES, WITH A CAST IRON BLOCK V–CONFIGURATION FOR 6 CYLINDERS. THE HORSEPOWER RATING OF THE ENGINE AT IT'S MINIMUM TOLERANCE LEVEL SHALL BE SUFFICIENT TO DRIVE THE ALTERNATOR AND ALL CONNECTED ACCESSORIES.

THE AC GENERATOR SHALL BE; SYNCHRONOUS, FOUR POLE, 2/3 PITCH, REVOLVING FIELD, DRIP–PROOF CONSTRUCTION, SINGLE PRELUBRICATED SEALED BEARING, AIR COOLED BY A DIRECT DRIVE CENTRIFUGAL BLOWER FAN, AND DIRECTLY CONNECTED TO THE ENGINE WITH FLEXIBLE DRIVE DISC. ALL INSULATION SYSTEM COMPONENTS SHALL MEET NEMA MG1 TEMPERATURE LIMITS FOR CLASS H INSULATION SYSTEM. ACTUAL TEMPERATURE RISE MEASURED BY RESISTANCE METHOD AT FULL LOAD SHALL NOT EXCEED 105 DEGREES CENTIGRADE.

THE GENERATOR SET SHALL BE PROVIDED WITH AN OUTDOOR, ALUMINUM SOUND–ATTENUATED ENCLOSURE. THE ENCLOSURE SHALL REDUCE THE SOUND LEVEL OF THE GENERATOR SET WHILE OPERATING AT FULL RATED LOAD TO A MAXIMUM OF 85 DBA AT ANY LOCATION 21 FT FROM THE GENERATOR SET IN A FREE FIELD ENVIRONMENT. THE ENCLOSURE PACKAGE SHALL COMPLY WITH THE REQUIREMENTS OF THE NATIONAL ELECTRICAL CODE FOR ALL WIRING MATERIALS AND COMPONENT SPACING. ALL DOORS SHALL BE LOCKABLE, AND INCLUDE RETAINERS TO HOLD THE DOOR OPEN DURING SERVICE. ENCLOSURE ROOF SHALL BE CAMBERED TO PREVENT RAINWATER ACCUMULATION. OPENINGS SHALL BE SCREENED TO LIMIT ACCESS OF RODENTS INTO THE ENCLOSURE. PROVIDE CHART OF AVAILABLE COLOR SELECTIONS FOR SELECTION OF ENCLOSURE COLOR BY THE OWNER.

ALL ELECTRICAL POWER AND CONTROL INTERCONNECTIONS SHALL BE MADE WITHIN THE PERIMETER OF THE ENCLOSURE. A FACTORY–MOUNTED EXHAUST SILENCER SHALL BE INSTALLED INSIDE THE ENCLOSURE. ALL SHEET METAL SURFACES SHALL BE PRIMED FOR CORROSION PROTECTION AND FINISH PAINTED WITH THE MANUFACTURERS STANDARD COLOR USING A TWO STEP ELECTROCOATING PAINT PROCESS. THE PAINTING PROCESS SHALL RESULT IN A COATING THAT MEETS THE FOLLOWING REQUIREMENTS:
PRIMER THICKNESS, 0.5–2.0 MILS.
TOP COAT THICKNESS, 0.8–1.2 MILS.
GLOSS, PER ASTM D523–89, 80% PLUS OR MINUS 5%.
GLOSS RETENTION AFTER ONE YEAR SHALL EXCEED 50%.
CROSSHATCH ADHESION, PER ASTM D3359–93, 4B–5B.
IMPACT RESISTANCE, PER ASTM D2794–93, 120–160 INCH–POUNDS.
SALT SPRAY, PER ASTM B117–90, 1000+ HOURS.
HUMIDITY, PER ASTM D2247–92, 1000+ HOURS.

THE ENGINE–GENERATOR UNIT SHALL INCLUDE THE NECESSARY FEATURES TO MEET THE REQUIREMENTS OF NFPA 70, NFPA 110, AND IEEE 446. THE UNIT SHALL BE MANUFACTURED BY CUMMINS OR CATERPILLAR.

THE ENGINE–GENERATOR PERFORMANCE SHALL MEET THE FOLLOWING CRITERIA:

RATED POWER OUTPUT (STANDBY):	SIZED TO MEET LIFT STATION DEMAND
OUTPUT VOLTAGES (NOTE: MATCH UTILITY VALUES):	3–PHASE, 60 HZ, 4 WIRE
RATED SPEED:	1,800 RPM
MAXIMUM DIESEL CONSUMPTION AT FULL LOAD:	ENGINEER TO SIZE. MIN. 3 DAY SUPPLY OF DIESEL @ MAX. LOAD.
VOLTAGE REGULATION, NO LOAD TO FULL LOAD:	+/– 1.0%
RANDOM VOLTAGE VARIATION:	+/– 1.0%
FREQUENCY REGULATION:	ISOCHRONOUS
RANDOM FREQUENCY VARIATION:	+/– 0.6%
OPERATE AT FULL LOAD FOR AMBIENT CONDITIONS:	100 DEG F, AT 100' MSL
EXCITATION	PMG

THE ENGINE–GENERATOR SET SHALL START ON RECEIPT OF A START SIGNAL FROM THE AUTOMATIC TRANSFER SWITCH. THE START SIGNAL SHALL BE VIA HARDWIRED CONNECTION TO THE GENERATOR SET CONTROL, AND THE UNIT SHALL COMPLETE A TIME DELAY START PERIOD AS PROGRAMMED INTO THE CONTROL. THE GENERATOR SET CONTROL SHALL INITIATE THE STARTING SEQUENCE WHICH SHALL INCLUDE:
VERIFICATION THAT THE ENGINE IS ROTATING WHEN THE STARTER IS SIGNALED.
ENGINE START AND ACCELERATION TO START DISCONNECT SPEED. (IF THE ENGINE DOES NOT START, IT SHALL COMPLETE A CYCLE CRANKING PROCESS.
IF THE ENGINE DOES NOT START IT SHALL BE SHUT DOWN AND LOCKED OUT, AND THE CONTROL SYSTEM SHALL INDICATE "FAIL TO START"; THE ENGINE SHALL ACCELERATE TO RATED SPEED AND THE ALTERNATOR TO RATED VOLTAGE. EXCITATION SHALL BE DISABLED UNTIL THE ENGINE HAS EXCEEDED PROGRAMMED IDLE SPEED, AND REGULATED TO PREVENT OVER VOLTAGE CONDITIONS AND OSCILLATION AS THE ENGINE ACCELERATES AND THE ALTERNATOR BUILDS TO RATED VOLTAGE.
UPON REACHING RATED SPEED AND VOLTAGE, THE GENERATOR SET SHALL OPERATE AS DICTATED BY THE CONTROL SYSTEM IN ISOCHRONOUS, SYNCHRONIZE, LOAD SHARE, LOAD DEMAND, OR LOAD GOVERN STATE.
WHEN ALL START SIGNALS HAVE BEEN REMOVED FROM THE GENERATOR SET, IT SHALL COMPLETE A TIME DELAY STOP SEQUENCE. THE DURATION OF THE TIME DELAY STOP PERIOD SHALL BE ADJUSTABLE BY THE OPERATOR.
UPON COMPLETION OF THE TIME DELAY STOP PERIOD, THE GENERATOR SET CONTROL SHALL SWITCH OFF THE EXCITATION SYSTEM AND SHALL SHUT DOWN.
ANY START SIGNAL RECEIVED AFTER THE TIME STOP SEQUENCE HAS BEGUN SHALL IMMEDIATELY TERMINATE THE STOPPING SEQUENCE AND RETURN THE GENERATOR SET TO ISOCHRONOUS OPERATION.

THE GENERATOR SET AND ASSOCIATED EQUIPMENT SHALL BE WARRANTED FOR A PERIOD OF NOT LESS THAN 5 YEARS FROM THE DATE OF COMMISSIONING AGAINST DEFECTS IN MATERIALS AND WORKMANSHIP. THE WARRANTY SHALL BE COMPREHENSIVE. NO DEDUCTIBLES SHALL BE ALLOWED FOR TRAVEL TIME, SERVICE HOURS, REPAIR PARTS COST, ETC. GENERATOR UNIT SHALL MEET THE REQUIREMENTS OF ISO 9001 AND U.L. 2200.

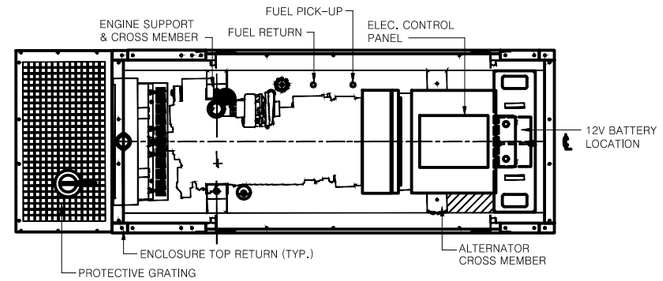

PLAN VIEW WITHOUT ROOF

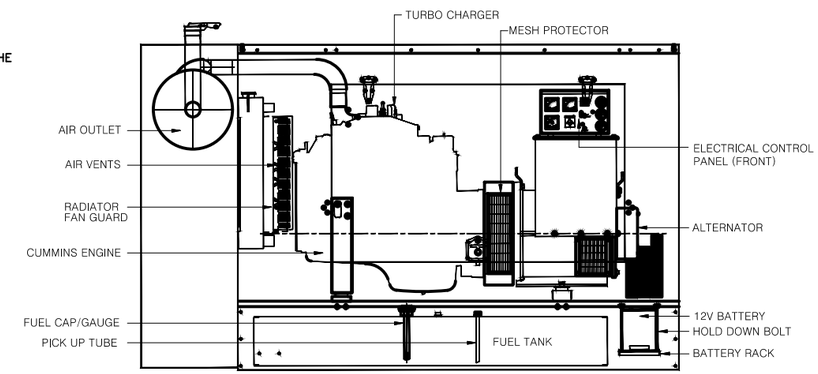

LEFT SIDE VIEW

THE ENCLOSURE, GENERATOR AND BASE MOUNTED FUEL TANK SHALL BE CERTIFIED BY A LICENSED STRUCTURAL PROFESSIONAL ENGINEER LICENSED IN THE STATE OF FLORIDA AND TO BE DESIGN RATED FOR A WIND LOAD RESISTANCE AS REQUIRED BY THE FLORIDA BUILDING CODE. PROVIDE TWO (2) ORIGINALS AND SIX (6) COPIES OF THE P.E. STAMPED CERTIFIED WIND LOAD CALCULATIONS REPORT INDICATING COMPLIANCE TO THE OWNER'S REPRESENTATIVE. THE ENCLOSURE WIND LOAD RATING SHALL BE INCLUDED ON THE MANUFACTURER'S ENCLOSURE DRAWINGS.

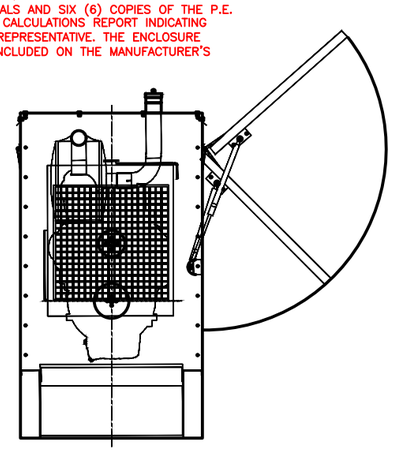

FRONT VIEW

SIZING OF THE GENERATOR SHALL BE SIGNED AND SEALED BY AN ELECTRICAL ENGINEER.

DIESEL STORAGE SYSTEM

PROVIDE A DIESEL STORAGE AND SUPPLY SYSTEM FOR THE ENGINE GENERATOR CONFIGURED AS SHOWN. THE SYSTEM SHALL MEET THE REQUIREMENTS OF THE DIESEL FUEL CODE, THE APPLICABLE PROVISIONS OF FLORIDA STATUTES, CHAPTER 206.874, AND FLORIDA ADMINISTRATIVE CODE, CHAPTER SF–2.001 DIESEL. FUEL TANK TO BE SIZED FOR 500 GALLONS AND SHALL MEET REQUIREMENTS FOR A COMPLETE INSTALLATION AS PER STATE AND LOCAL REQUIREMENTS.

THE GENERATOR SET AND ENCLOSURE SHALL BE MOUNTED AND SHIPPED TO THE JOBSITE ON THE FORMED STEEL SUB–BASE PROVIDED BY THE GENERATOR SUPPLIER. PROVISIONS FOR CRANE UNLOADING OF THE COMPLETE PACKAGE SHALL BE DESIGNED INTO THE BASE OF THE UNIT. NEOPRENE PADS SHALL BE INSTALLED BETWEEN THE FUEL TANK AND THE CONCRETE SLAB. A 500 GALLON BASE MOUNTED FUEL TANK SHALL BE ATTACHED TO THE CONCRETE SLAB WITH STAINLESS STEEL EXPANSION ANCHORS. THE BASE AND ENCLOSURE ASSEMBLY SHALL ALLOW ROOM WITHIN THE PACKAGE TO MOUNT AND MAINTAIN THE SPECIFIED BATTERY CHARGER, ENGINE STARTING BATTERIES, RACKS, AND CABLES, MAIN LINE CIRCUIT BREAKER, AND ENGINE–GENERATOR CONTROL PANEL, AND OTHER ITEMS AS SPECIFIED OR AS SHOWN ON THE DRAWINGS. THE WEIGHT OF THE ENTIRE UNIT CONSISTING OF GENERATOR SET, BASE, ENCLOSURE, AND ALL OTHER SPECIFIED ITEMS INCLUDING ALL LIQUIDS (I.E., FUEL OIL, LUBE OIL, AND COOLING WATER SHALL BE CALCULATED BY THE MANUFACTURER. THE BASE OF THE UNIT SHALL BE DESIGNED AND MANUFACTURED AS A HEAVY DUTY, FORMED STEEL CONSTRUCTION WITH FOUR (4)POINT LIFTING PROVISION TO SUPPORT THE CALCULATED WEIGHT. DETAILS AND MANUFACTURER'S CERTIFICATION OF THE BASE CONSTRUCTION SHALL BE INCLUDED WITH THE DRAWINGS SUBMITTED FOR APPROVAL AS WELL AS ALL WEIGHT CALCULATIONS. THE UNIT SHALL BE EQUIPPED WITH A DOUBLE WALL IN–BASE UL142 FUEL TANK AND SHALL BE SUPPLIED WITH A LOCKABLE, EXTERIOR LOCATED FILL CAP. ALL NECESSARY FUEL AND VENT LINES WITH VENT CAPS FOR PROPER ENGINE PERFORMANCE SHALL BE PROVIDED AS WELL AS A MEANS TO READILY DETECT THE FUEL LEVEL IN THE TANK WITHOUT THE USE OF A MEASURING STICK. THE FUEL TANK BASE MAXIMUM LENGTH & WIDTH DIMENSIONS SHALL BE AS NOTED ON THE DRAWINGS AND BE FORMED FROM STEEL OF A MINIMUM METAL THICKNESS OF 0.25–INCH (1/4–INCH) AND SHALL BE FITTED WITH LOW FUEL LEVEL INNER WALL LEAK ALARM CONTACT FOR LOCAL AND REMOTE ANNUNCIATION. THE FUEL TANK HEIGHT SHALL NOT EXCEED 24 INCHES.

AUTOMATIC TRANSFER SWITCH

PROVIDE AN AUTOMATIC TRANSFER SWITCH (ATS) AS SHOWN. THE ATS SHALL BE RATED TO CARRY 100 PERCENT OF RATED CURRENT CONTINUOUSLY IN THE ENCLOSURE SUPPLIED, IN AMBIENT TEMPERATURES OF 40 TO +60 DEGREES C, RELATIVE HUMIDITY UP TO 95% (NON CONDENSING), AND ALTITUDES UP TO 1,000 FEET. TRANSFER SWITCH EQUIPMENT SHALL HAVE FAULT CURRENT RATINGS SUITABLE FOR USE IN THE APPLICATION, AS INDICATED BY THE AVAILABLE FAULT CURRENT AT THE SITE AS PER THE ELECTRIC UTILITY.THE ATS SHALL BE A CUMMINS–ONAN 3–POLE OR APPROVED EQUAL.

THE ATS SHALL BE DOUBLE THROW, ELECTRICALLY AND MECHANICALLY INTERLOCKED, AND MECHANICALLY HELD IN THE SOURCE 1 AND SOURCE 2 POSITIONS. THE TRANSFER SWITCH SHALL BE SPECIFICALLY DESIGNED TO TRANSFER TO THE BEST AVAILABLE SOURCE IF IT INADVERTENTLY STOPS IN A NEUTRAL POSITION. THE ATS SHALL BE ELECTRICALLY INTERLOCKED IN BOTH AUTOMATIC AND MANUAL OPERATION MODES TO PERFORM THE OPERATION SEQUENCE SPECIFIED. THE POWER TRANSFER MECHANISM SHALL INCLUDE PROVISIONS FOR MANUAL OPERATION UNDER LOAD WITH THE DOOR OF THE CABINET CLOSED. ALL WIRING SHALL BE TAGGED TO MATCH THE SCHEMATIC, SHALL BE UL LISTED 105 DEGREE C, 600 VOLT RATED, AND SIZED AS REQUIRED. CIRCUIT BOARDS SHALL BE CONNECTED WIRING HARNESSES BY MEANS OF LOCKING DISCONNECT PLUG(S). THE 3–POLE ATS SHALL BE PROVIDED WITH A NEUTRAL BUS AND LUGS SIZED TO CARRY 100% OF THE ATS CURRENT RATING. FIELD CONTROL CONNECTIONS SHALL BE MADE ON A COMMON TERMINAL BLOCK THAT IS CLEARLY AND PERMANENTLY LABELED.

THE ATS SHALL INCORPORATE ADJUSTABLE TIME DELAYS FOR GENERATOR SET START (ADJUSTABLE IN A RANGE FROM 0–15 SECONDS); TRANSFER (ADJUSTABLE IN A RANGE FROM 0–120 SECONDS); RETRANSFER (ADJUSTABLE IN A RANGE FROM 0–30 MINUTES); AND GENERATOR STOP (COOLDOWN; ADJUSTABLE IN A RANGE OF 0–30 MINUTES), AND SHALL BE CONFIGURABLE TO CONTROL THE OPERATION TIME FROM SOURCE TO SOURCE (PROGRAM TRANSITION OPERATION) IN OPEN TRANSITION MODE. THE CONTROL SYSTEM SHALL BE CAPABLE OF ENABLING OR DISABLING THIS FEATURE, AND ADJUSTING THE TIME PERIOD TO A SPECIFIC VALUE. A PHASE BAND MONITOR OR SIMILAR DEVICE IS NOT AN ACCEPTABLE ALTERNATE FOR THIS FEATURE.

THE ATS SHALL PROVIDE AN ISOLATED NORMALLY HELD OPEN, AND CLOSE TO START RELAY CONTACT FOR STARTING OF THE ENGINE–GENERATOR SET. OUTPUT CONTACTS SHALL BE FORM C, FOR COMPATIBILITY. THE ATS SHALL PROVIDE RELAY CONTACTS TO INDICATE THE FOLLOWING CONDITIONS: SOURCE 1 AVAILABLE, LOAD CONNECTED TO SOURCE 1, SOURCE 2 AVAILABLE, SOURCE 2 CONNECTED TO LOAD.

THE ATS ENCLOSURE SHALL BE NEMA 4X 304 STAINLESS STEEL (OR BETTER), UL LISTED AND SHALL PROVIDE NEC REQUIRED WIRE BEND SPACE. THE CABINET DOOR SHALL BE KEY LOCKING. SEPARATE ENCLOSURES SHALL BE THE NEMA TYPE SPECIFIED. MANUAL OPERATING HANDLES AND ALL CONTROL SWITCHES (OTHER THAN KEY OPERATED SWITCHES) SHALL BE ACCESSIBLE TO AUTHORIZED PERSONNEL ONLY BY OPENING THE KEY LOCKING CABINET DOOR.

FACTORY TESTING: THE TRANSFER SWITCH SUPPLIER SHALL PERFORM A COMPLETE OPERATIONAL TEST ON THE TRANSFER SWITCH PRIOR TO SHIPPING FROM THE FACTORY. A CERTIFIED TEST REPORT SHALL BE AVAILABLE ON REQUEST. TEST PROCESS SHALL INCLUDE CALIBRATION OF VOLTAGE SENSORS.

AFTER INSTALLATION, THE SUPPLIER SHALL CONDUCT A COMPLETE OPERATION, BASIC MAINTENANCE, AND EMERGENCY SERVICE SEMINAR FOR UP TO 10 PERSONS EMPLOYED BY THE CITY. THE SEMINAR SHALL INCLUDE INSTRUCTION ON OPERATION OF THE TRANSFER EQUIPMENT, NORMAL TESTING AND EXERCISE, ADJUSTMENTS TO THE CONTROL SYSTEM AND EMERGENCY OPERATION PROCEDURES. THE CLASS DURATION SHALL BE AT LEAST 4 HOURS IN LENGTH, AND INCLUDE PRACTICAL OPERATION WITH THE INSTALLED EQUIPMENT.

REINFORCED CONCRETE EQUIPMENT PADS

PROVIDE BUILT–UP PAD AREA FOR NEW CONCRETE FOUNDATIONS TO ELEVATIONS AS SHOWN. USE CLEAN GRANULAR FILL IN 6–INCH LIFTS. GRANULAR FILL SHALL BE CLEAN SAND WITH NO MORE THAN 10% FINES PASSING THROUGH A NO.200 SIEVE. COMPACT TO 95% RELATIVE COMPACTION PER ASTM D1557. PROVIDE TEST REPORT FROM INDEPENDENT TEST LAB SATISFACTORY TO OWNER AND ENGINEER.

COORDINATE FORM PLACEMENT WITH PIPING AND ELECTRICAL CONDUITS AS SHOWN IN THESE DRAWINGS. FORMWORK FOR SLAB SHALL BE IN ACCORDANCE WITH ACI 347, FOR PLACEMENT OF CONCRETE IN ACCORDANCE WITH ACI 304R.

REINFORCING STEEL SHALL BE DEFORMED BARS IN ACCORDANCE WITH ASTM A615, GRADE 60, PLACED ON SUPPORTS IN ACCORDANCE WITH THE CRSI MANUAL OF STANDARD PRACTICE.

CONCRETE MIX SHALL UTILIZE TYPE II PORTLAND CEMENT WITH NATURAL AGGREGATE MEETING ASTM C150 AND ASTM C33 REQUIREMENTS RESPECTIVELY. THE MINIMUM 28–DAY STRENGTH SHALL BE 4,000 PSI. TAKE SAMPLES DURING POUR AND PROVIDE TEST CYLINDER BREAK REPORT FROM INDEPENDENT TEST LAB.

PLACE CONTROL JOINTS AS SHOWN. ROUND OFF ALL TOP EXPOSED EDGES WITH 0.25–INCH RADIUS EDGING TOOL.

PROTECT SURFACES AND WET CURE CONCRETE FOR A MINIMUM OF 7 DAYS AFTER PLACEMENT.

THE CONCRETE SUPPORT PAD FINISHED GRADE SHALL BE 18" ABOVE BASE FLOOD ELEVATION. FUEL TANK VENTS SHALL BE PROTECTED FROM FLOODING.

THE CITY OF DAYTONA BEACH
UTILITIES DEPARTMENT

THIS SHEET SHOWS THE MINIMUM INFORMATION AND THE BASIC OUTLINE OF FACILITIES REQUIRED. THIS DRAWING IS PROVIDED FOR INFORMATIONAL PURPOSES ONLY. A PROFESSIONAL ENGINEER SHALL BE REQUIRED TO CERTIFY ALL DETAILS.

WETWELL MOUNTED SANITARY OR COMBINED SEWER
LIFT STATION
GENERATOR
SPECS & DETAILS
S–23 (Sheet 7 of 7)

FY–15/16	
Drawing Date: 01/08	
Drawn By: KLH	
Checked By: JMP	
Scale: NTS	
Revision Date: 04/11	
File Name: S–23 7 of 7	
Page 97	

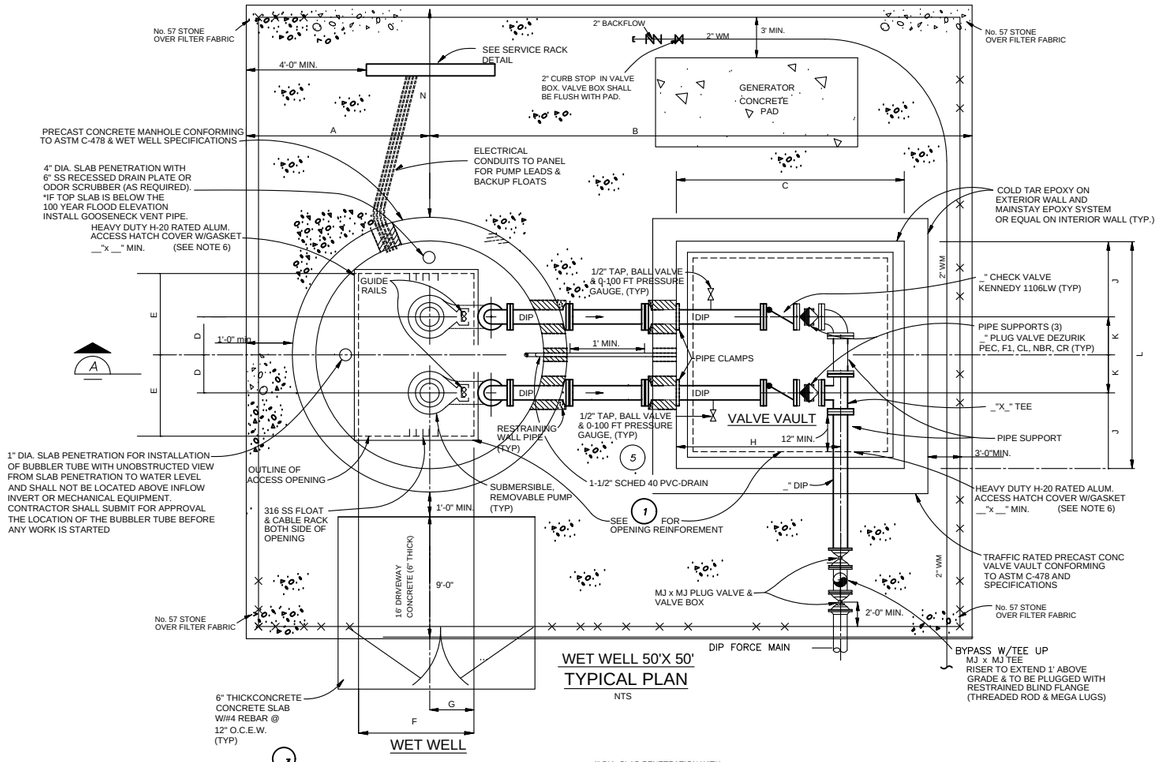

WET WELL 50'X 50'
TYPICAL PLAN
NTS

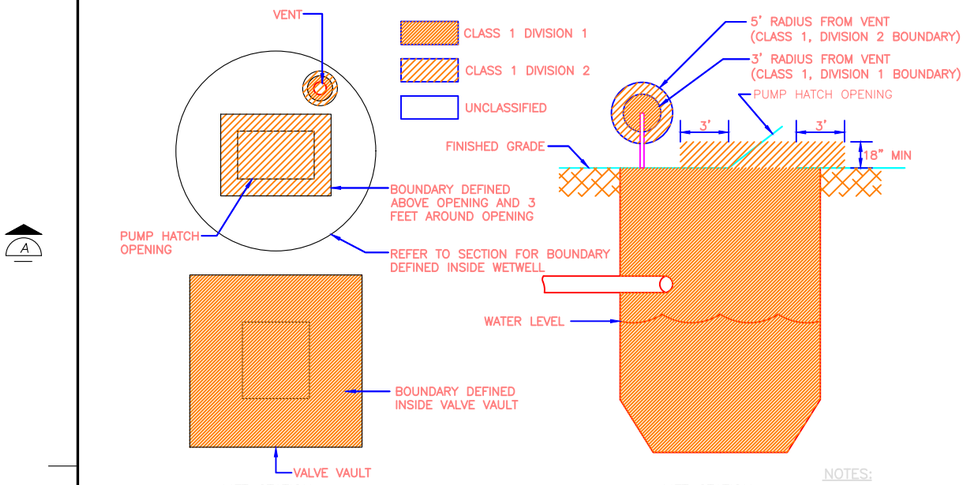

NFPA BOUNDARY CLASSIFICATION
N.T.S.

NOTES:
1. THE CONSULTING ENGINEER MUST SPECIFY IF THE STATION IS FOR A 'RESIDENTIAL' OR 'SANITARY OR COMBINED' SEWER SERVICE.

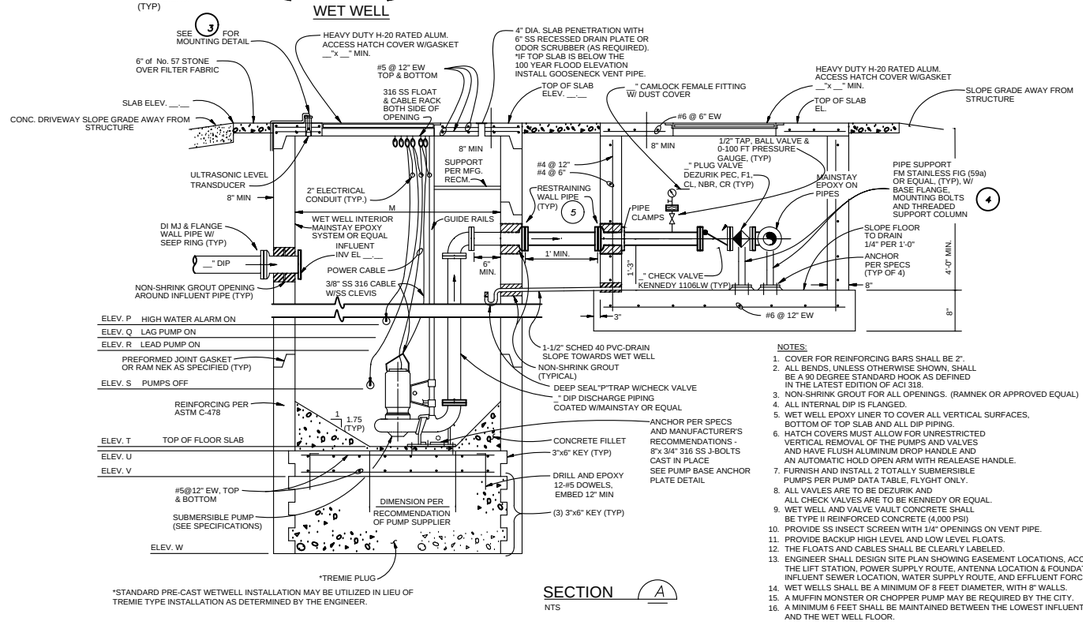

*STANDARD PRE-CAST WETWELL INSTALLATION MAY BE UTILIZED IN LIEU OF TREMIE TYPE INSTALLATION AS DETERMINED BY THE ENGINEER.

SECTION A
NTS

NOTES:
1. COVER FOR REINFORCING BARS SHALL BE 2".
2. ALL BENDS, UNLESS OTHERWISE SHOWN, SHALL BE A 90 DEGREE STANDARD HOOK AS DEFINED IN THE LATEST EDITION OF ACI 318.
3. NON-SHRINK GROUT FOR ALL OPENINGS. (RAMNEK OR APPROVED EQUAL)
4. ALL INTERNAL DIP IS FLANGED.
5. WET WELL EPOXY LINER TO COVER ALL VERTICAL SURFACES, BOTTOM OF TOP SLAB AND ALL DIP PIPING.
6. HATCH COVERS MUST ALLOW FOR UNRESTRICTED VERTICAL REMOVAL OF THE PUMPS AND VALVES AND HAVE FLUSH ALUMINUM DROP HANDLE AND AN AUTOMATIC HOLD OPEN ARM WITH REALEASE HANDLE.
7. FURNISH AND INSTALL 2 TOTALLY SUBMERSIBLE PUMPS PER PUMP DATA TABLE, FLYGHT ONLY.
8. ALL VAVLES ARE TO BE DEZURIK AND ALL CHECK VALVES ARE TO BE KENNEDY OR EQUAL.
9. WET WELL AND VALVE VAULT CONCRETE SHALL BE TYPE II REINFORCED CONCRETE (4,000 PSI)
10. PROVIDE SS INSECT SCREEN WITH 1/4" OPENINGS ON VENT PIPE.
11. PROVIDE BACKUP HIGH LEVEL AND LOW LEVEL FLOATS.
12. THE FLOATS AND CABLES SHALL BE CLEARLY LABELED.
13. ENGINEER SHALL DESIGN SITE PLAN SHOWING EASEMENT LOCATIONS, ACCESS TO THE LIFT STATION, POWER SUPPLY ROUTE, ANTENNA LOCATION & FOUNDATION, THE INFLUENT SEWER LOCATION, WATER SUPPLY ROUTE, AND EFFLUENT FORCE MAIN ROUTE.
14. WET WELLS SHALL BE A MINIMUM OF 8 FEET DIAMETER, WITH 8" WALLS.
15. A MUFFIN MONSTER OR CHOPPER PUMP MAY BE REQUIRED BY THE CITY.
16. A MINIMUM 6 FEET SHALL BE MAINTAINED BETWEEN THE LOWEST INFLUENT INVERT AND THE WET WELL FLOOR.

LIFT STATION DATA

DIMENSIONS	DESIGN	ASBUILT
DIM. A		
DIM. B		
DIM. C		
DIM. D		
DIM. E		
DIM. F		
DIM. G		
DIM. H		
DIM. J		
DIM. K		
DIM. L		
DIM. M		
DIM. N		

ELEVATION	DESIGN	ASBUILT
ELEV. P		
ELEV. Q		
ELEV. R		
ELEV. S		
ELEV. T		
ELEV. U		
ELEV. V		
ELEV. W		

ALL ITEMS MUST BE FILLED IN.

PUMP DATA

MANUFACTURER:	MODEL:
IMPELLER NO.:	NOMINAL SIZE: IN.
SPEED: RPM	DISCHARGE SIZE: IN.
VOLTAGE: v. 60 Hz.	PHASE: 3
HORSEPOWER: hp.	MIN. SOLID SIZE: IN.
OPERATING CONDITIONS SHALL BE ____ GPM, ____ FT. TDH, MIN. SHUT OFF HEAD ____ FT.	

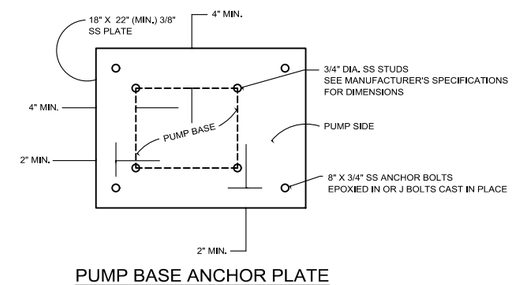

PUMP BASE ANCHOR PLATE
NTS

NEXT

RETURN TO TOC

THE CITY OF DAYTONA BEACH
UTILITIES DEPARTMENT

THIS SHEET SHOWS THE MINIMUM INFORMATION AND THE BASIC OUTLINE OF FACILITIES REQUIRED. THIS DRAWING IS PROVIDED FOR INFORMATIONAL PURPOSES ONLY. A PROFESSIONAL ENGINEER SHALL BE REQUIRED TO CERTIFY ALL DETAILS.

SUBMERSIBLE SANITARY OR COMBINED SEWER
LIFT STATION
STANDARD
DETAIL
S-24 (Sheet 1 of 8)

FY: 16/17
Drawing Date: 01/16/13
Drawn By: JMP
Checked By: AMS
Scale: NTS
Revision Date: 6/2016
File Name: S-24 1 of 8

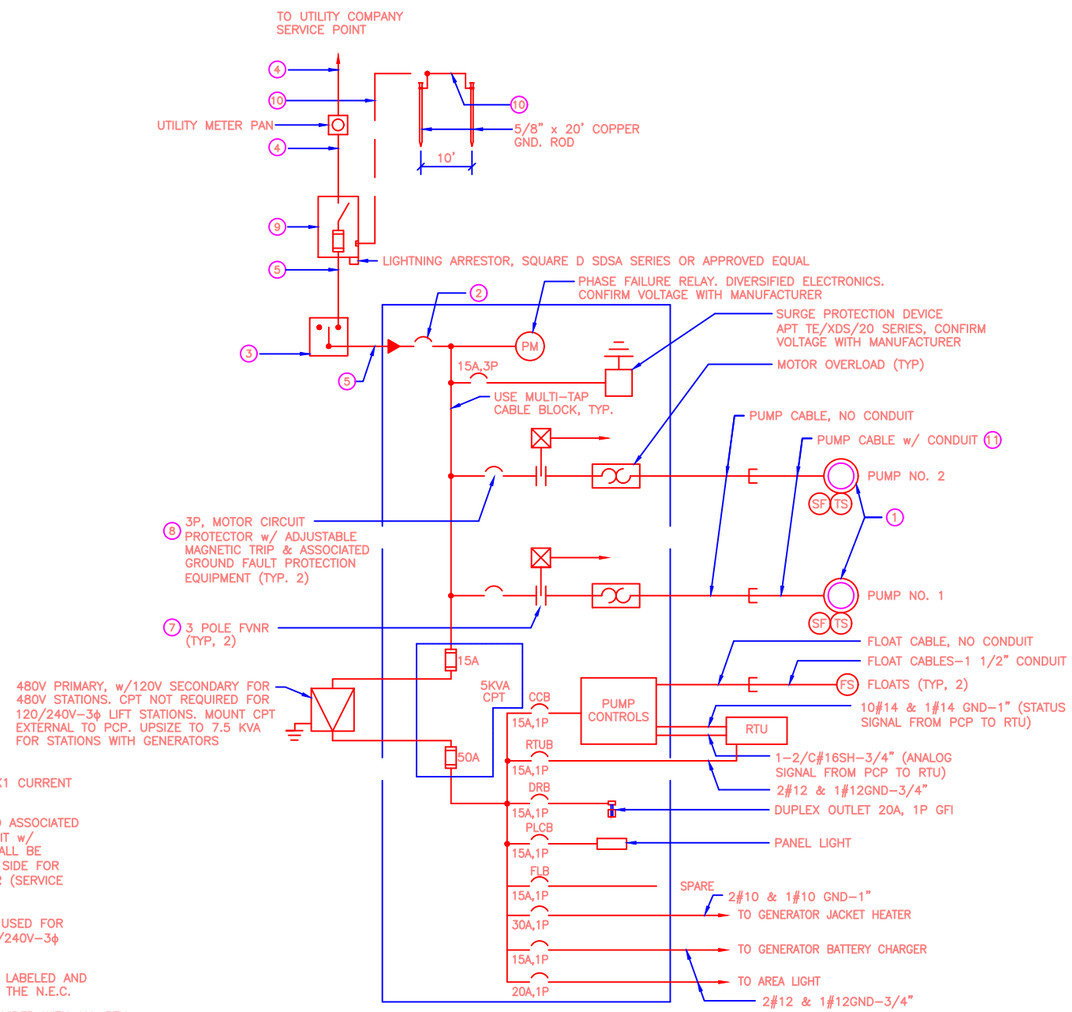

PUMP CONTROL PANEL (PCP) SINGLE LINE DIAGRAM

NOTES:

1. FUSES SHALL BE BUSSMAN CLASS RK1 CURRENT LIMITING.
2. NEMA 4X 304 SS FUSED SWITCH AND ASSOCIATED REJECTION CLIPS AND 4W NEUTRAL KIT w/ CURRENT LIMITING FUSES. SWITCH SHALL BE EQUIPPED w/ SPLIT BOLTS ON LOAD SIDE FOR INSTALLATION OF LIGHTNING ARRESTOR (SERVICE ENTRANCE RATED).
3. B PHASE (HIGH LEG) SHALL NOT BE USED FOR SINGLE PHASE CIRCUITS ON ALL 120/240V-3ϕ OPEN DELTA SERVICES.
4. ALL CONTROL PANELS SHALL BE U.L. LABELED AND SHALL COMPLY WITH ARTICLE 409 OF THE N.E.C.
5. AN ESSEX PHONE LINE MUST BE PROVIDED WITH ALL RTU FROM AT&T. ALSO MUST COORDINATE WITH THE CITY'S IT DEPARTMENT ABOUT PHONE INFORMATION.

	1	2	3	4	5	6	7	8	9	10	11
PROPOSED VOLTAGE	PROPOSED MOTOR SIZE (HP)	PANEL MAIN BKR.	ATS OR MTS	SERVICE CONDUIT & CONDUCTORS	LOAD CONDUIT & CONDUCTORS	EMERGENCY CONDUCTORS	STARTER SIZE	MOTOR BREAKER	FUSED DISC/FUSES (SEE NOTES)	GROUND	PUMP CABLE CONDUIT SIZE
480V, 3ø, 3W	X ≥ 25 HP	200A,3P	200A,3P	4#3/0-2 1/2"	3#3/0 & 1#4GND-2 1/2"	3#3/0 & 1#6GND	3	125A,3P	200A,3P/200A	#2	PER N.E.C.
480V, 3ø, 3W	10HP ≤ X < 25 HP	200A,3P	200A,3P	4#3/0-2 1/2"	3#3/0 & 1#4GND-2 1/2"	3#3/0 & 1#6GND	2	70A,3P	200A,3P/200A	#2	PER N.E.C.
480V, 3ø, 3W	X < 10 HP	200A,3P	200A,3P	4#3/0-2 1/2"	3#3/0 & 1#4GND-2 1/2"	3#3/0 & 1#6GND	1	30A,3P	200A,3P/200A	#2	PER N.E.C.
240V, 3ø, 3W	15HP ≤ X ≤ 20 HP	200A,3P	200A,3P	4#3/0-2 1/2"	3#3/0 & 1#4GND-2 1/2"	3#3/0 & 1#4GND	3	125A,3P	200A,3P/200A	#2	PER N.E.C.
240V, 3ø, 3W	7.5HP ≤ X < 15 HP	100A,3P	100A,3P	4#2-1 1/2"	3#2 & 1#6GND-1 1/2"	3#2 & 1#6GND	2	80A,3P	100A,3P/100A	#6	PER N.E.C.
240V, 3ø, 3W	X < 7.5 HP	100A,3P	100A,3P	4#2-1 1/2"	3#2 & 1#6GND-1 1/2"	3#2 & 1#6GND	1	50A,3P	100A,3P/100A	#6	PER N.E.C.

NOTE: SOLID STATE SOFT STARTERS SHALL BE PROVIDED FOR MOTOR SIZES ABOVE 50 HP.

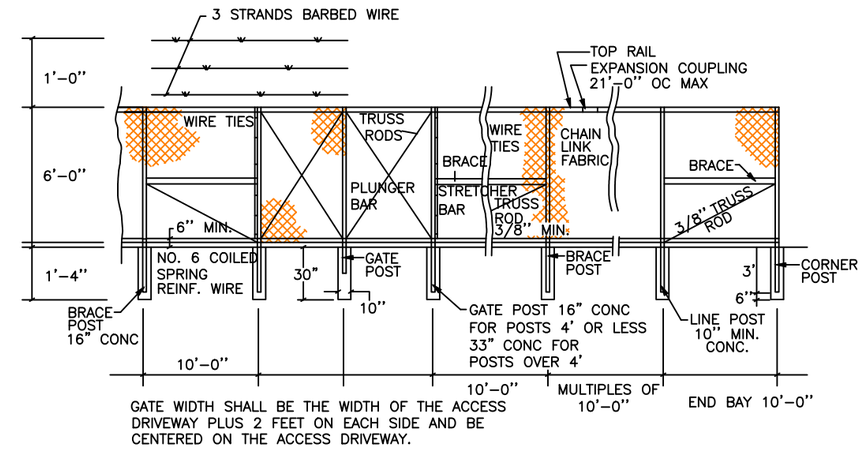

FENCE DETAIL

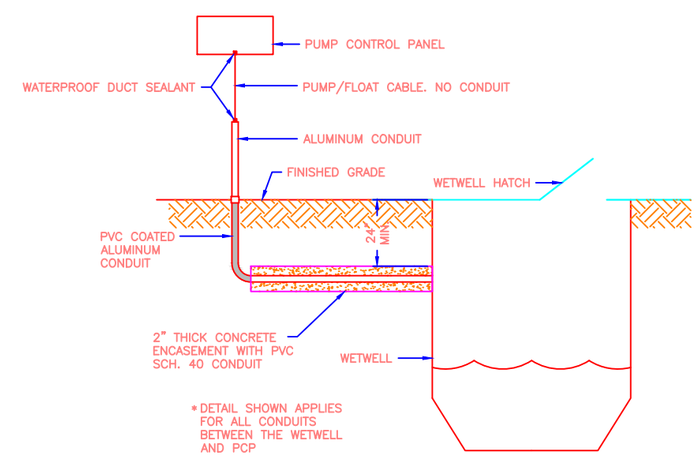

CONDUIT INSTALLATION DETAIL

NEXT PREV RETURN TO TOC

THE CITY OF DAYTONA BEACH
UTILITIES DEPARTMENT

THIS SHEET SHOWS THE MINIMUM INFORMATION AND THE BASIC OUTLINE OF FACILITIES REQUIRED. THIS DRAWING IS PROVIDED FOR INFORMATIONAL PURPOSES ONLY. A PROFESSIONAL ENGINEER SHALL BE REQUIRED TO CERTIFY ALL DETAILS.

SUBMERSIBLE SANITARY OR COMBINED SEWER
LIFT STATION
STANDARD
DETAIL
S-24 (Sheet 2 of 8)

FY: 15/16	
Drawing Date: 01/16/13	
Drawn By: RRM	
Checked By: SEB	
Scale: NTS	
Revision Date: -	
File Name: S-24 2 of 8	
Page 99	

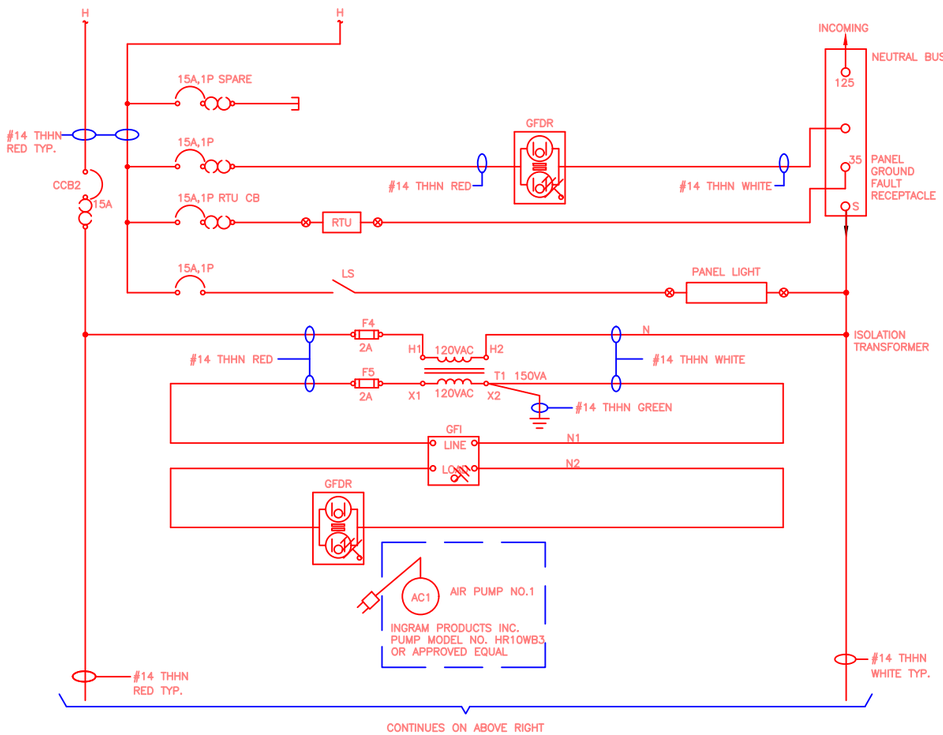

PCP ELEMENTARY DIAGRAM

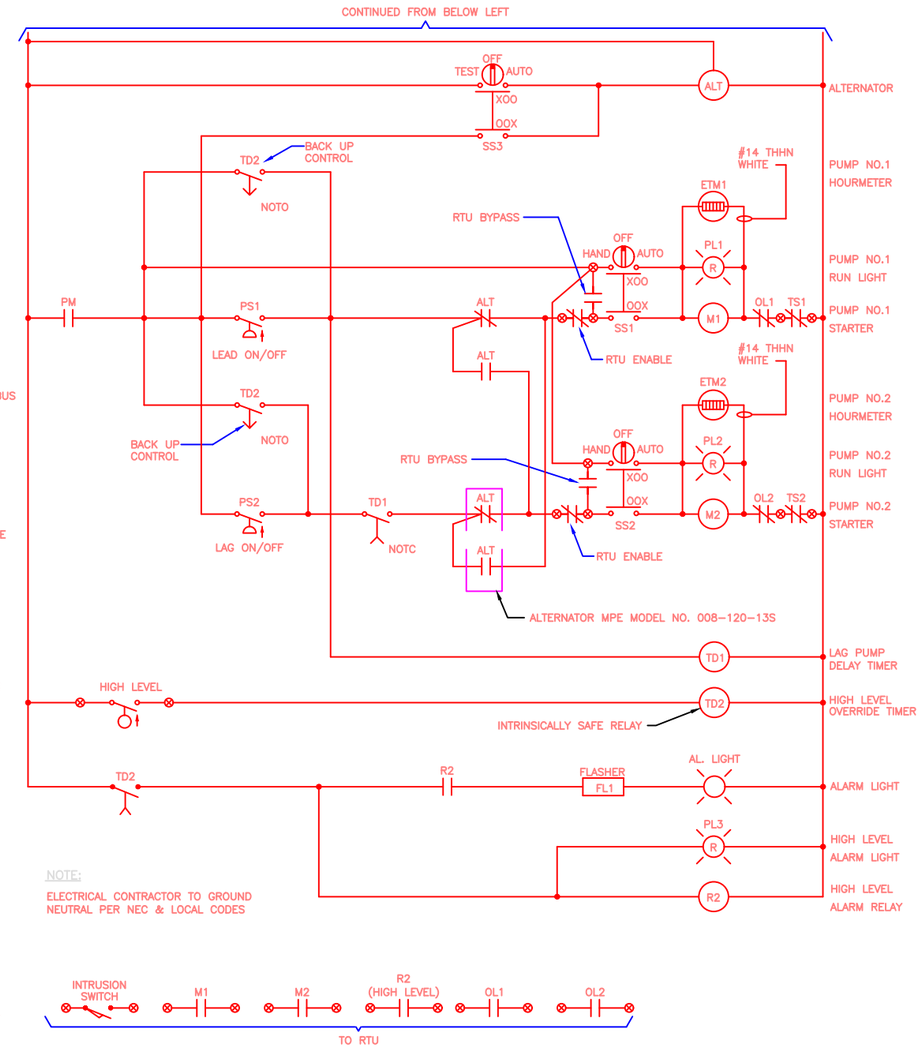

PCP ELEMENTARY DIAGRAM (CONTINUED)

CONTROL PANEL ABBREVIATIONS

A	AMPS
AC	AIR COMPRESSOR
ACR	AIR COMPRESSOR RECEPTACLE
AH	ALARM HORN
AL	ALARM LIGHT
ALT	ALTERNATOR
AS	ALARM SILENCER
ASB	ALARM SILENCE BUTTON
ATS	ALTERNATOR TEST SWITCH
AV	AIR VENT
C	CONDUIT
CCB	CONTROL CIRCUIT BREAKER
CPT	CONTROL POWER TRANSFORMER
CR	CONTROL RELAY
CT	CONTROL TRANSFORMER
DR	DUPLEX RECEPTACLE
DRB	DUPLEX RECEPTACLE BREAKER
ECB	EMERGENCY CIRCUIT BREAKER
EPR	EMERGENCY POWER RECEPTACLE
ETM	ELAPSED TIME METER
F	FUSE
FB	FEEDER BREAKER (SURGE PROTECTION)
FI	FLOW INDICATOR
FL	FLUORESCENT LIGHT
FLB	FLUORESCENT LIGHT BREAKER
FS	FLOAT SWITCH
FTS	FLOAT TEST SWITCH
GFDR	GROUND FAULT DUPLEX RECEPTACLE
GND	GROUND
GR	GENERATOR RECEPTACLE
HLA	HIGH LEVEL ALARM
HOA	HANDS-OFF-AUTOMATIC SELECTOR
HS	HAND SWITCH
IAS	INTRUDER ALARM SWITCH
LA	LIGHTNING ARRESTOR
LI	WETWELL LEVEL INDICATOR
LR	LEVEL RELAY
LS	LIGHT SWITCH
MCB	MAIN CIRCUIT BREAKER
MCP	MOTOR CIRCUIT PROTECTOR
MS	MOTOR STARTER
N	NEUTRAL
OL	OVERLOAD HEATERS
NOTO	NORMALLY OPEN/TIMED TO OPEN
NOTC	NORMALLY OPEN/TIMED TO CLOSE
PL	LEVEL INDICATORS (PUSH-TO-TEST)
PLCB	PANEL LIGHT CIRCUIT BREAKER
PM	PHASE MONITOR
PS	PRESSURE SWITCH
RL	PUMP RUN INDICATOR
RTU	REMOTE TELEMETRY UNIT
RTUB	REMOTE TELEMETRY UNIT BREAKER
SB	SLOW BLOW FUSE
SC	SURGE CAPACITOR
SF1	SEAL FAIL RELAY
SS	STAINLESS STEEL
T	TERMINAL
TB	COPPER POWER TERMINATION LUGS
TD	TIME DELAY RELAY
TL	TROUBLE LIGHT (40W FLUORESCENT)
TLS	TROUBLE LIGHT SWITCH
TS	TERMINAL STRIP

NOTES

1. LIGHTS SHALL BE "PUSH TO TEST" TYPE.

NEXT PREV

RETURN TO TOC

THE CITY OF DAYTONA BEACH
UTILITIES DEPARTMENT

THIS SHEET SHOWS THE MINIMUM INFORMATION AND THE BASIC OUTLINE OF FACILITIES REQUIRED. THIS DRAWING IS PROVIDED FOR INFORMATIONAL PURPOSES ONLY. A PROFESSIONAL ENGINEER SHALL BE REQUIRED TO CERTIFY ALL DETAILS.

SUBMERSIBLE SANITARY OR COMBINED SEWER
LIFT STATION
CONTROL AND RTU
DIAGRAMS
S-24 (Sheet 3 of 8)

FY-15/16	
Drawing Date:	01/16/13
Drawn By:	RRM
Checked By:	SEB
Scale:	NTS
Revision Date:	
File Name:	S-24 3 of 8
Page 100	

LSPro - Daytona Monitor ONLY

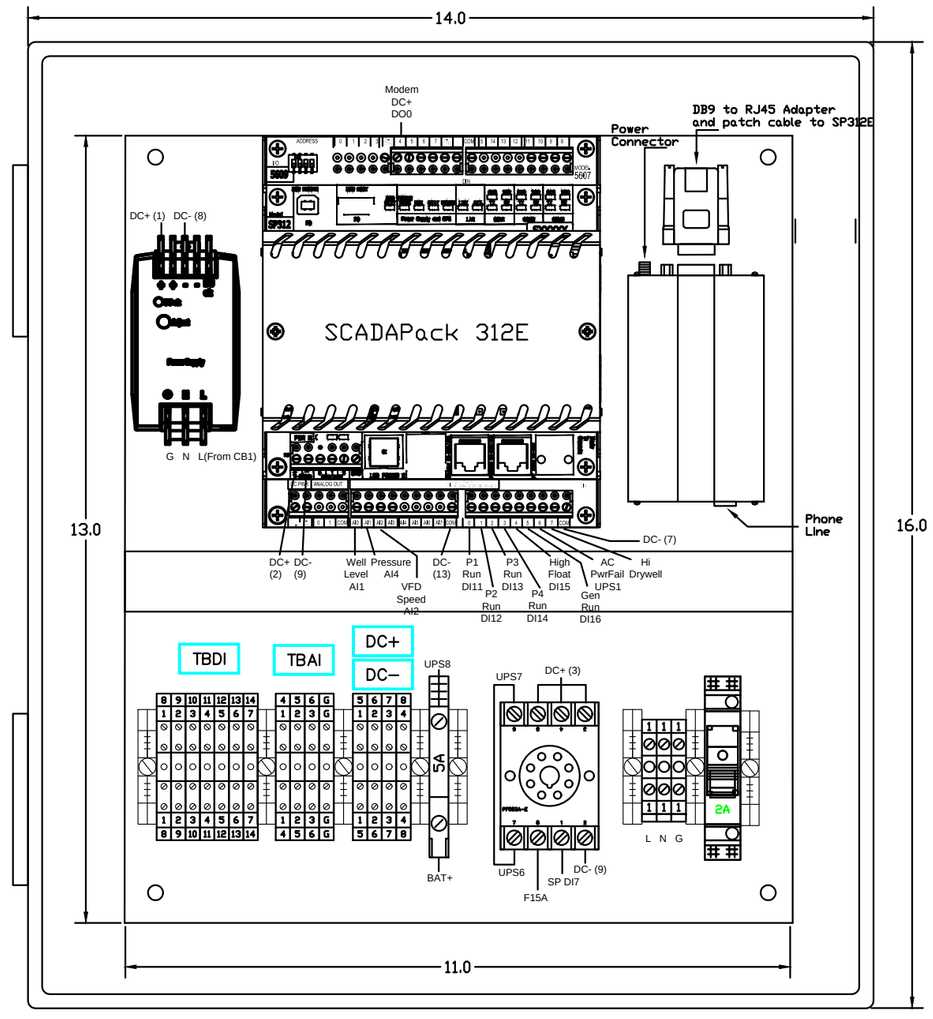

DATE	REVISION	BY	CH'D
5/26/2015	SHOP DRAWINGS	PS	

Copyright 2016 BCI Technologies All Rights Reserved - LSMonitor

BCI TECHNOLOGIES

The information, specifications and data contained in this drawing are furnished by and are to remain the property of BCI Technologies. The acceptor warrants that no use will be made of the same except to facilitate the installation, maintenance and operation of the equipment represented by said drawing.

TOLERANCES (UNLESS OTHERWISE SPECIFIED)

CUSTOMER: CITY OF DAYTONA BEACH

TITLE: LIFT STATION RTU w/SP312E

SCALE:	DRAWN BY:	CHECKED BY:	APP'D BY:
N/A	JB		
DATE: 3/21/2014	SHEET 1 OF SHEETS	DRAWING NO. LS-Monitor-PL-001-03 with SP312E	

THE CITY OF DAYTONA BEACH
UTILITIES DEPARTMENT

THIS SHEET SHOWS THE MINIMUM INFORMATION AND THE BASIC OUTLINE OF FACILITIES REQUIRED. THIS DRAWING IS PROVIDED FOR INFORMATIONAL PURPOSES ONLY. A PROFESSIONAL ENGINEER SHALL BE REQUIRED TO CERTIFY ALL DETAILS.

SUBMERSIBLE SANITARY OR COMBINED SEWER
LIFT STATION
RTU W/SP312E
DIAGRAMS
S-24 (Sheet 4 of 8)

FY-15/16
Drawing Date: 03/14
Drawn By: KLH
Checked By: JMP
Scale: NTS
Revision Date:
File Name: S-24 4 of 8

LSPro - Daytona Monitor ONLY

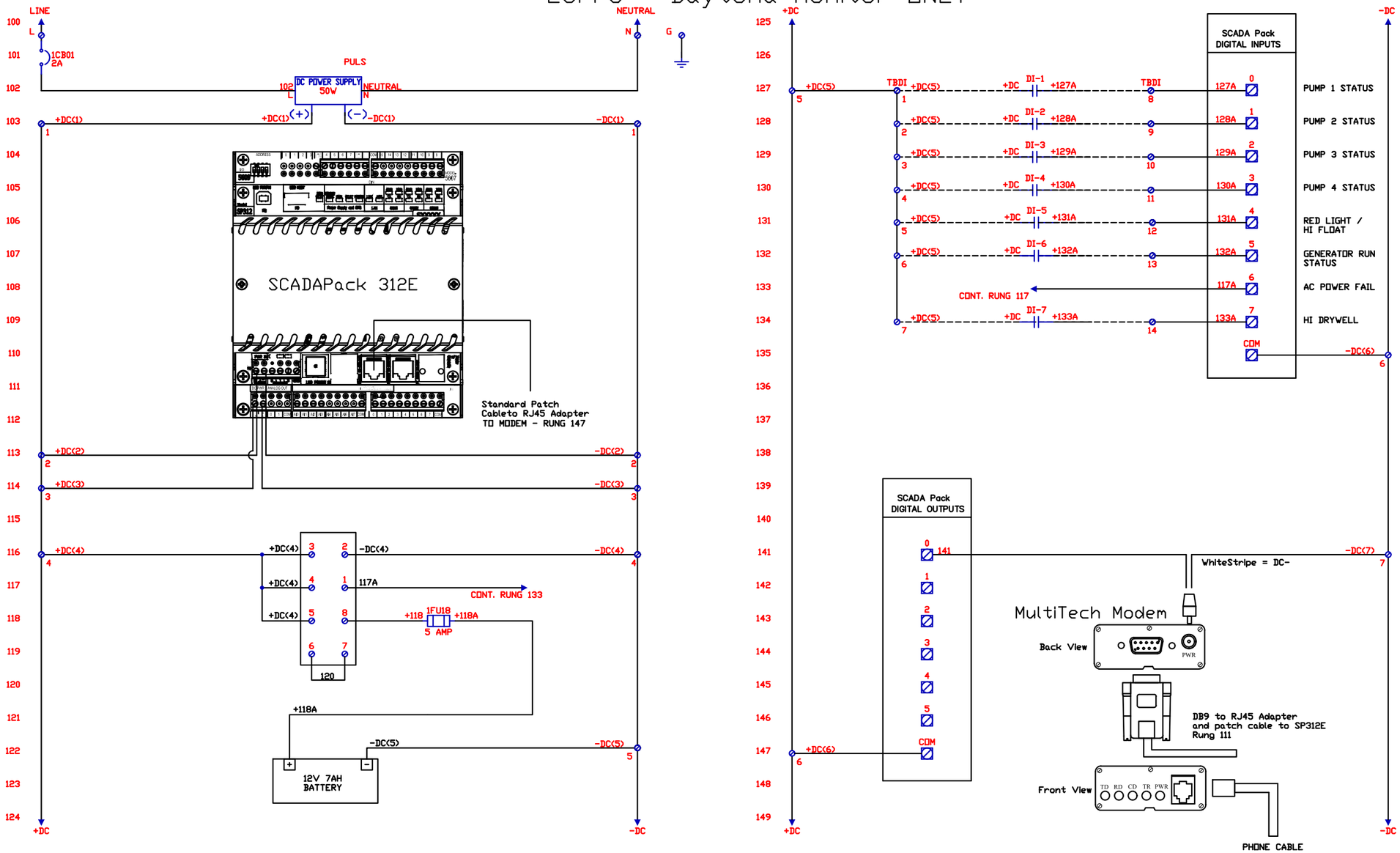

DATE	REVISION	BY	CH'D
5/26/2015	SHOP DRAWINGS	PS	
	Copyright 2016 BCI Technologies All Rights Reserved - LSMonitor		

BCI TECHNOLOGIES

The information, specifications and data contained in this drawing are furnished by and are to remain the property of BCI Technologies. The acceptor warrants that no use will be made of the same except to facilitate the installation, maintenance and operation of the equipment represented by said drawing.

TOLERANCES UNLESS OTHERWISE SPECIFIED

CUSTOMER: CITY OF DAYTONA BEACH

TITLE: LIFT STATION RTU w/SP312E

SCALE	DRAWN BY	CHECKED BY	APP'D BY
N/A	JB		
DATE	SHEET / OF SHEETS	DRAWING NO.	
3/21/2014	1	40067-EE-001-01 with SP312E	

NEXT PREV

RETURN TO TOC

THE CITY OF DAYTONA BEACH
UTILITIES DEPARTMENT

THIS SHEET SHOWS THE MINIMUM INFORMATION AND THE BASIC OUTLINE OF FACILITIES REQUIRED. THIS DRAWING IS PROVIDED FOR INFORMATIONAL PURPOSES ONLY. A PROFESSIONAL ENGINEER SHALL BE REQUIRED TO CERTIFY ALL DETAILS.

SUBMERSIBLE SANITARY OR COMBINED SEWER
LIFT STATION
RTU W/SP312E
DIAGRAMS
S-24 (Sheet 5 of 8)

FY-15/16
Drawing Date: 03/14
Drawn By: KLH
Checked By: JMP
Scale: NTS
Revision Date:
File Name: S-24 5 of 8
Page 102

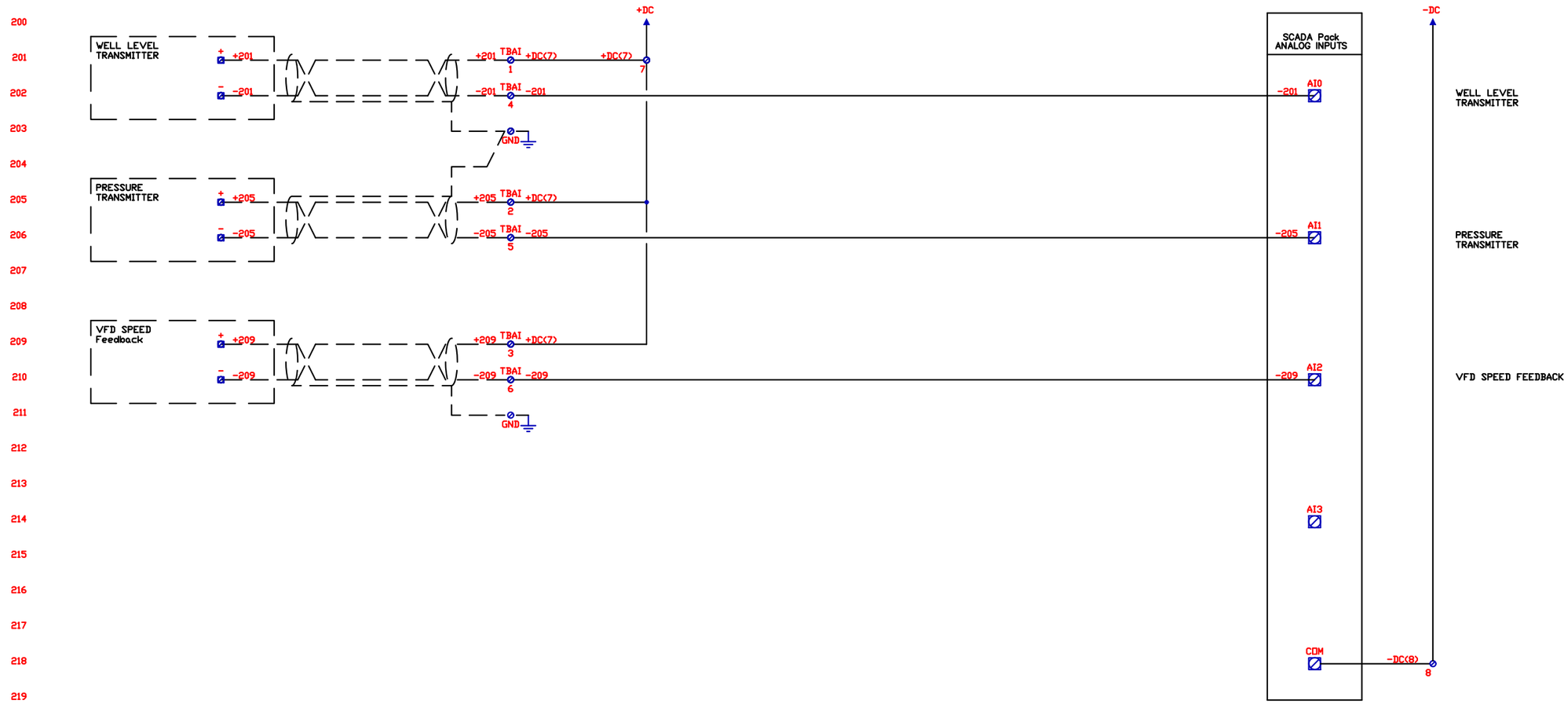

DATE	REVISION	BY	CH'D
5/26/2015	SHOP DRAWINGS	PS	

Copyright 2016 BCI Technologies All Rights Reserved - LSMonitor

BCI TECHNOLOGIES

The information, specifications and data contained in this drawing are furnished by and are to remain the property of BCI Technologies. The acceptor warrants that no use will be made of the same except to facilitate the installation, maintenance and operation of the equipment represented by said drawing.

TOLERANCES (UNLESS OTHERWISE SPECIFIED)

CUSTOMER: CITY OF DAYTONA BEACH

TITLE: LIFT STATION RTU wSP312E

SCALE:	DRAWN BY:	CHECKED BY:	APP'D BY:
N/A	JB		
DATE: 3/21/2014	SHEET 2 OF SHEETS 2	DRAWING NO. 40067-EE-002-01 with SP312E	

NEXT PREV

RETURN TO TOC

THE CITY OF DAYTONA BEACH
UTILITIES DEPARTMENT

THIS SHEET SHOWS THE MINIMUM INFORMATION AND THE BASIC OUTLINE OF FACILITIES REQUIRED. THIS DRAWING IS PROVIDED FOR INFORMATIONAL PURPOSES ONLY. A PROFESSIONAL ENGINEER SHALL BE REQUIRED TO CERTIFY ALL DETAILS.

SUBMERSIBLE SANITARY OR COMBINED SEWER
LIFT STATION
RTU W/SP312E
DIAGRAMS
S-24 (Sheet 6 of 8)

FY-15/16
Drawing Date: 03/14
Drawn By: KLH
Checked By: JMP
Scale: NTS
Revision Date:
File Name: S-24 6 of 8
Page 103

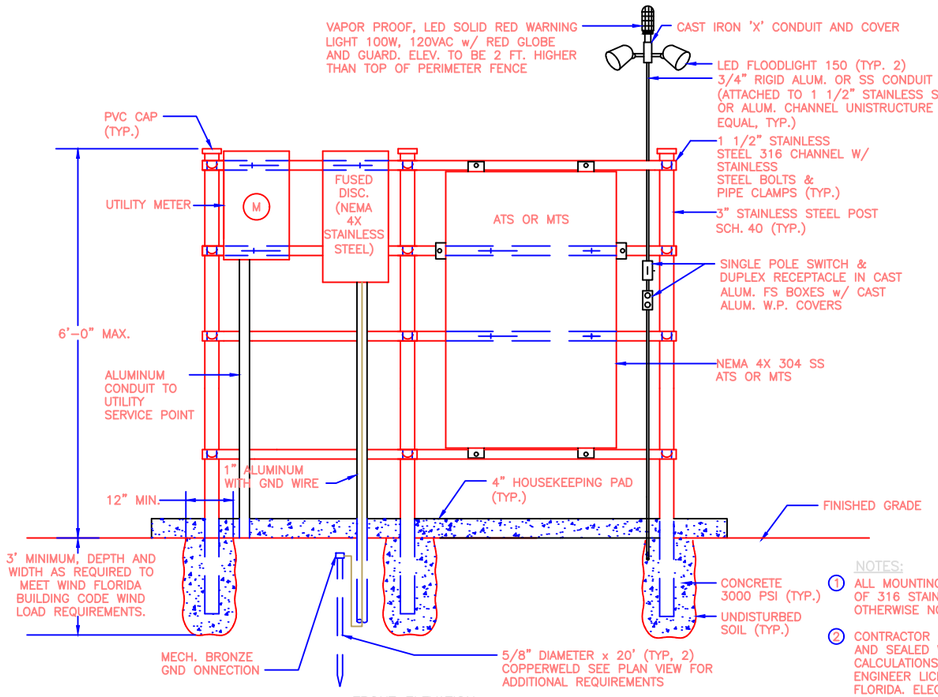

NOTES:

1. ALL MOUNTING HARDWARE SHALL BE OF 316 STAINLESS STEEL, UNLESS OTHERWISE NOTED.
2. CONTRACTOR SHALL SUBMIT SIGNED AND SEALED WIND LOAD CALCULATIONS FROM A STRUCTURAL ENGINEER LICENSED IN THE STATE OF FLORIDA. ELECTRICAL EQUIPMENT SERVICE RACK TO BE CERTIFIED PER FLORIDA BUILDING CODE.
3. ABOVE GRADE ALUMINUM CONDUIT TO BE TRANSITIONED TO PVC SCHEDULE 80 BELOW GRADE FOR NON-SIGNAL CONDUITS.

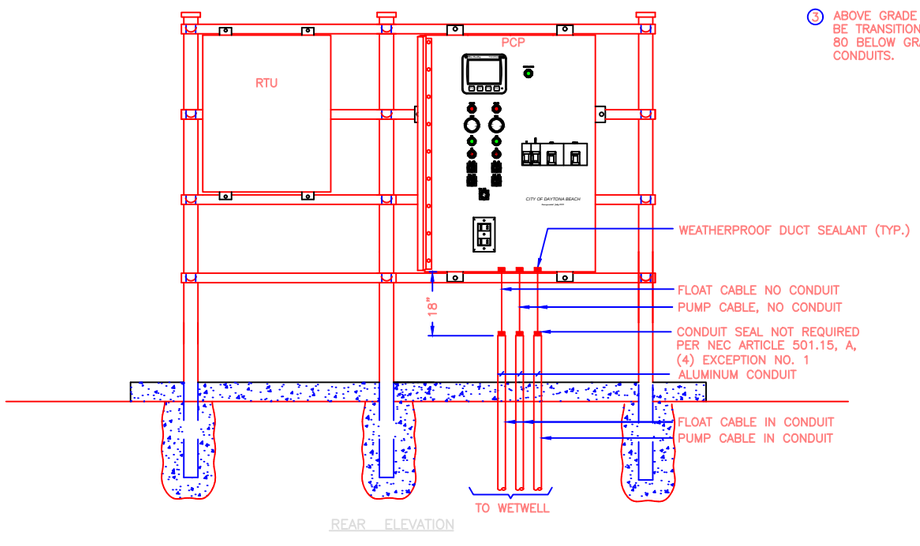

SERVICE RACK DETAIL

N.T.S.

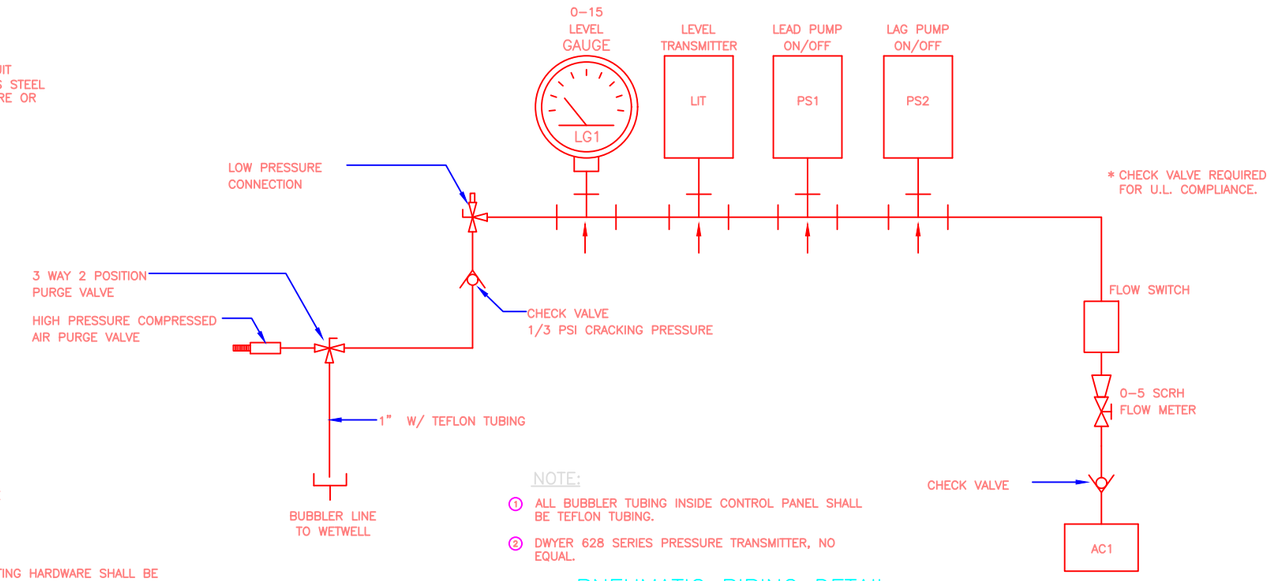

NOTE:

1. ALL BUBBLER TUBING INSIDE CONTROL PANEL SHALL BE TEFLON TUBING.
2. DWYER 628 SERIES PRESSURE TRANSMITTER, NO EQUAL.

PNEUMATIC PIPING DETAIL

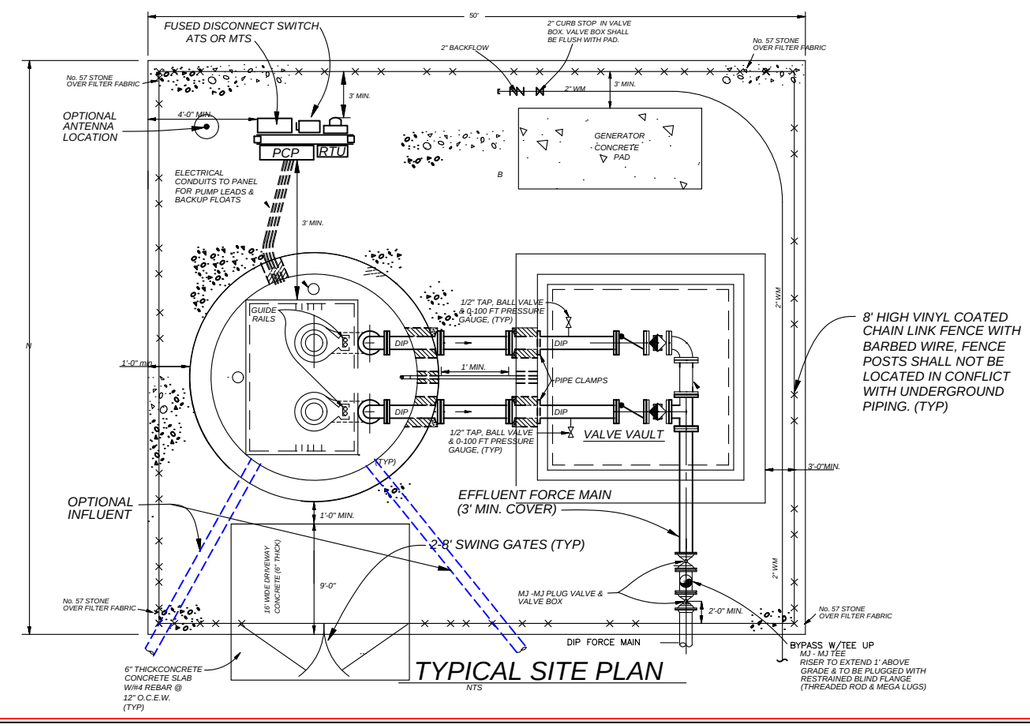

TYPICAL SITE PLAN

NTS

NEXT PREV

RETURN TO TOC

THE CITY OF DAYTONA BEACH
UTILITIES DEPARTMENT

THIS SHEET SHOWS THE MINIMUM INFORMATION AND THE BASIC OUTLINE OF FACILITIES REQUIRED. THIS DRAWING IS PROVIDED FOR INFORMATIONAL PURPOSES ONLY. A PROFESSIONAL ENGINEER SHALL BE REQUIRED TO CERTIFY ALL DETAILS.

SUBMERSIBLE SANITARY OR COMBINED SEWER
LIFT STATION
CONTROL AND RTU
STANDARDS
S-24 (Sheet 7 of 8)

FY-15/16	
Drawing Date:	01/16/13
Drawn By:	RRM
Checked By:	SEB
Scale:	NTS
Revision Date:	01/15/16
File Name:	S-24 7 of 8
Page	104

ENGINE–GENERATOR SYSTEM

PROVIDE A COMPLETE FACTORY ASSEMBLED ENGINE–GENERATOR UNIT TO PROVIDE AUTOMATIC STANDBY ELECTRICAL POWER FOR THE PUMPING STATION. AN AUTOMATIC TRANSFER SWITCH (ATS) SHALL ALSO BE PROVIDED TO SENSE LOSS OF UTILITY POWER AND TO INITIATE AUTOMATIC START OF THE ENGINE–GENERATOR UNIT AND THE TRANSFER OF POWER FROM THE UTILITY FEED. ALSO PROVIDE DRY CONTACT ENGINE START ENABLE TO RECEIVE A RUN SIGNAL UPON HIGH WETWELL LEVEL FROM LEVEL FLOAT IN LIFT STATION. ~~PROVIDE CONTACTS IN THE ENGINE–GENERATOR CONTOL PANEL TO SIGNAL COOLDOWN/SHUTDOWN UPON LOW LEVEL IN PUMP STATION FROM LIFT PUMP LOW LEVEL SHUTOFF.~~

PROVIDE COMPLETE ENGINE FUEL SYSTEM, ELECTRONIC GOVERNOR SYSTEM, ENGINE COOLING SYSTEM, ELECTRIC STARTING SYSTEM COMPLETE WITH BATTERIES AND CHARGING SYSTEM, EXHAUST SYSTEM WITH SILENCER, VIBRATION ISOLATION SYSTEM, DIGITAL (MICROPROCESSOR–BASED) ELECTRONIC CONTROLS, OUTPUT METERING (RMS VOLTAGE, CURRENT, FREQUENCY, POWER FACTOR, AND KW HOURS), SOUND–INSULATED OUTDOOR WEATHER–PROOF ENCLOSURE, AND OTHER REQUIRED APPURTENANCES, ALL OF WHICH SHALL BE MOUNTED ON A HEAVY–DUTY STEEL BASE WHICH SHALL BE FIELD MOUNTED ON A CAST IN PLACE CONCRETE FOUNDATION AS SHOWN.

THE ENGINE SHALL BE A DIESEL FUELED, RADIATOR AND FAN COOLED. MINIMUM DISPLACEMENT SHALL BE 256 CUBIC INCHES, WITH A CAST IRON BLOCK V–CONFIGURATION FOR 6 CYLINDERS. THE HORSEPOWER RATING OF THE ENGINE AT IT'S MINIMUM TOLERANCE LEVEL SHALL BE SUFFICIENT TO DRIVE THE ALTERNATOR AND ALL CONNECTED ACCESSORIES.

THE AC GENERATOR SHALL BE; SYNCHRONOUS, FOUR POLE, 2/3 PITCH, REVOLVING FIELD, DRIP–PROOF CONSTRUCTION, SINGLE PRELUBRICATED SEALED BEARING, AIR COOLED BY A DIRECT DRIVE CENTRIFUGAL BLOWER FAN, AND DIRECTLY CONNECTED TO THE ENGINE WITH FLEXIBLE DRIVE DISC. ALL INSULATION SYSTEM COMPONENTS SHALL MEET NEMA MG1 TEMPERATURE LIMITS FOR CLASS H INSULATION SYSTEM. ACTUAL TEMPERATURE RISE MEASURED BY RESISTANCE METHOD AT FULL LOAD SHALL NOT EXCEED 105 DEGREES CENTIGRADE.

THE GENERATOR SET SHALL BE PROVIDED WITH AN OUTDOOR, ALUMINUM SOUND–ATTENUATED ENCLOSURE. THE ENCLOSURE SHALL REDUCE THE SOUND LEVEL OF THE GENERATOR SET WHILE OPERATING AT FULL RATED LOAD TO A MAXIMUM OF 85 DBA AT ANY LOCATION 21 FT FROM THE GENERATOR SET IN A FREE FIELD ENVIRONMENT. THE ENCLOSURE PACKAGE SHALL COMPLY WITH THE REQUIREMENTS OF THE NATIONAL ELECTRICAL CODE FOR ALL WIRING MATERIALS AND COMPONENT SPACING. ALL DOORS SHALL BE LOCKABLE, AND INCLUDE RETAINERS TO HOLD THE DOOR OPEN DURING SERVICE. ENCLOSURE ROOF SHALL BE CAMBERED TO PREVENT RAINWATER ACCUMULATION. OPENINGS SHALL BE SCREENED TO LIMIT ACCESS OF RODENTS INTO THE ENCLOSURE. PROVIDE CHART OF AVAILABLE COLOR SELECTIONS FOR SELECTION OF ENCLOSURE COLOR BY THE OWNER.

ALL ELECTRICAL POWER AND CONTROL INTERCONNECTIONS SHALL BE MADE WITHIN THE PERIMETER OF THE ENCLOSURE. A FACTORY–MOUNTED EXHAUST SILENCER SHALL BE INSTALLED INSIDE THE ENCLOSURE. ALL SHEET METAL SURFACES SHALL BE PRIMED FOR CORROSION PROTECTION AND FINISH PAINTED WITH THE MANUFACTURERS STANDARD COLOR USING A TWO STEP ELECTROCOATING PAINT PROCESS. THE PAINTING PROCESS SHALL RESULT IN A COATING THAT MEETS THE FOLLOWING REQUIREMENTS:
PRIMER THICKNESS, 0.5–2.0 MILS.
TOP COAT THICKNESS, 0.8–1.2 MILS.
GLOSS, PER ASTM D523–89, 80% PLUS OR MINUS 5%.
GLOSS RETENTION AFTER ONE YEAR SHALL EXCEED 50%.
CROSSHATCH ADHESION, PER ASTM D3359–93, 4B–5B.
IMPACT RESISTANCE, PER ASTM D2794–93, 120–160 INCH–POUNDS.
SALT SPRAY, PER ASTM B117–90, 1000+ HOURS.
HUMIDITY, PER ASTM D2247–92, 1000+ HOURS.

THE ENGINE–GENERATOR UNIT SHALL INCLUDE THE NECESSARY FEATURES TO MEET THE REQUIREMENTS OF NFPA 70, NFPA 110, AND IEEE 446. THE UNIT SHALL BE MANUFACTURED BY CUMMINS OR CATERPILLAR.

THE ENGINE–GENERATOR PERFORMANCE SHALL MEET THE FOLLOWING CRITERIA:

RATED POWER OUTPUT (STANDBY):	SIZED TO MEET LIFT STATION DEMAND
OUTPUT VOLTAGES (NOTE: MATCH UTILITY VALUES):	3–PHASE, 60 HZ, 4 WIRE
RATED SPEED:	1,800 RPM
MAXIMUM DIESEL CONSUMPTION AT FULL LOAD:	ENGINEER TO SIZE. MIN. 3 DAY SUPPLY OF DIESEL @ MAX. DESIGN LOAD OF THE LIFT STATION.
VOLTAGE REGULATION, NO LOAD TO FULL LOAD:	+/– 1.0%
RANDOM VOLTAGE VARIATION:	+/– 1.0%
FREQUENCY REGULATION:	ISOCHRONOUS
RANDOM FREQUENCY VARIATION:	+/– 0.6%
OPERATE AT FULL LOAD FOR AMBIENT CONDITIONS:	100 DEG F, AT 100' MSL
EXCITATION	PMG

THE ENGINE–GENERATOR SET SHALL START ON RECEIPT OF A START SIGNAL FROM THE AUTOMATIC TRANSFER SWITCH. THE START SIGNAL SHALL BE VIA HARDWIRED CONNECTION TO THE GENERATOR SET CONTROL, AND THE UNIT SHALL COMPLETE A TIME DELAY START PERIOD AS PROGRAMMED INTO THE CONTROL. THE GENERATOR SET CONTROL SHALL INITIATE THE STARTING SEQUENCE WHICH SHALL INCLUDE:
VERIFICATION THAT THE ENGINE IS ROTATING WHEN THE STARTER IS SIGNALED.
ENGINE START AND ACCELERATION TO START DISCONNECT SPEED. (IF THE ENGINE DOES NOT START, IT SHALL COMPLETE A CYCLE CRANKING PROCESS.
IF THE ENGINE DOES NOT START IT SHALL BE SHUT DOWN AND LOCKED OUT, AND THE CONTROL SYSTEM SHALL INDICATE "FAIL TO START"; THE ENGINE SHALL ACCELERATE TO RATED SPEED AND THE ALTERNATOR TO RATED VOLTAGE. EXCITATION SHALL BE DISABLED UNTIL THE ENGINE HAS EXCEEDED PROGRAMMED IDLE SPEED, AND REGULATED TO PREVENT OVER VOLTAGE CONDITIONS AND OSCILLATION AS THE ENGINE ACCELERATES AND THE ALTERNATOR BUILDS TO RATED VOLTAGE.
UPON REACHING RATED SPEED AND VOLTAGE, THE GENERATOR SET SHALL OPERATE AS DICTATED BY THE CONTROL SYSTEM IN ISOCHRONOUS, SYNCHRONIZE, LOAD SHARE, LOAD DEMAND, OR LOAD GOVERN STATE.
WHEN ALL START SIGNALS HAVE BEEN REMOVED FROM THE GENERATOR SET, IT SHALL COMPLETE A TIME DELAY STOP SEQUENCE. THE DURATION OF THE TIME DELAY STOP PERIOD SHALL BE ADJUSTABLE BY THE OPERATOR.
UPON COMPLETION OF THE TIME DELAY STOP PERIOD, THE GENERATOR SET CONTROL SHALL SWITCH OFF THE EXCITATION SYSTEM AND SHALL SHUT DOWN.
ANY START SIGNAL RECEIVED AFTER THE TIME STOP SEQUENCE HAS BEGUN SHALL IMMEDIATELY TERMINATE THE STOPPING SEQUENCE AND RETURN THE GENERATOR SET TO ISOCHRONOUS OPERATION.

THE GENERATOR SET AND ASSOCIATED EQUIPMENT SHALL BE WARRANTED FOR A PERIOD OF NOT LESS THAN 5 YEARS FROM THE DATE OF COMMISSIONING AGAINST DEFECTS IN MATERIALS AND WORKMANSHIP. THE WARRANTY SHALL BE COMPREHENSIVE. NO DEDUCTIBLES SHALL BE ALLOWED FOR TRAVEL TIME, SERVICE HOURS, REPAIR PARTS COST, ETC. GENERATOR UNIT SHALL MEET THE REQUIREMENTS OF ISO 9001 AND U.L. 2200.

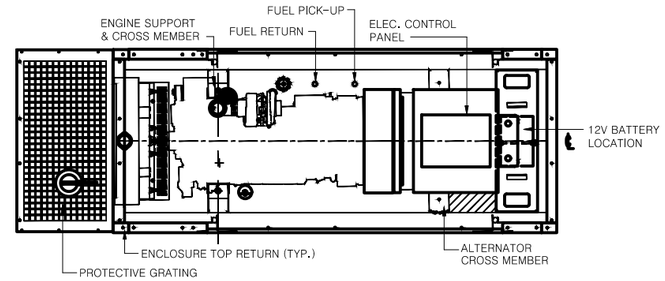

PLAN VIEW WITHOUT ROOF

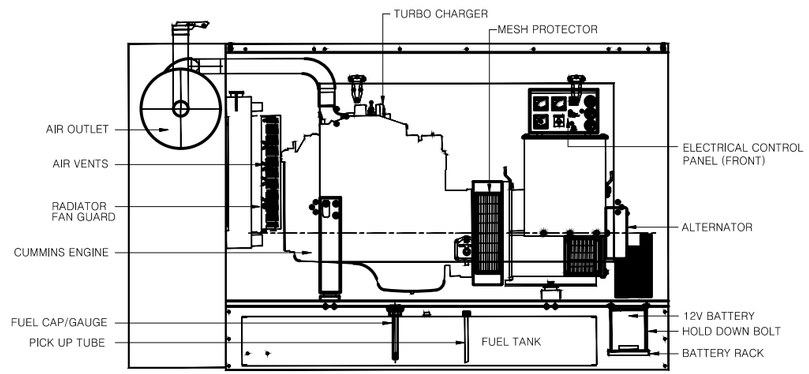

LEFT SIDE VIEW

THE ENCLOSURE, GENERATOR AND BASE MOUNTED FUEL TANK SHALL BE CERTIFIED BY A LICENSED STRUCTURAL PROFESSIONAL ENGINEER LICENSED IN THE STATE OF FLORIDA AND TO BE DESIGN RATED FOR A WIND LOAD RESISTANCE AS REQUIRED BY THE FLORIDA BUILDING CODE. PROVIDE TWO (2) ORIGINALS AND SIX (6) COPIES OF THE P.E. STAMPED CERTIFIED WIND LOAD CALCULATIONS REPORT INDICATING COMPLIANCE TO THE OWNER'S REPRESENTATIVE. THE ENCLOSURE WIND LOAD RATING SHALL BE INCLUDED ON THE MANUFACTURER'S ENCLOSURE DRAWINGS.

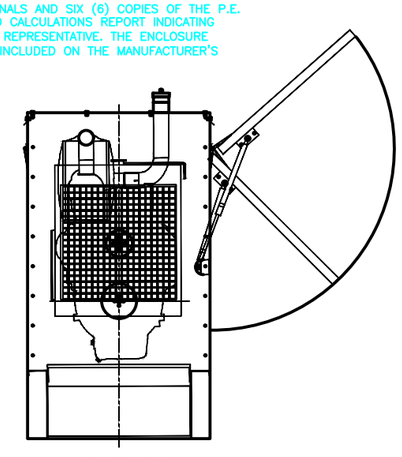

FRONT VIEW

SIZING OF THE GENERATOR SHALL BE SIGNED AND SEALED BY AN ELECTRICAL ENGINEER.

DIESEL STORAGE SYSTEM

PROVIDE A DIESEL STORAGE AND SUPPLY SYSTEM FOR THE ENGINE GENERATOR CONFIGURED AS SHOWN. THE SYSTEM SHALL MEET THE REQUIREMENTS OF THE DIESEL FUEL CODE, THE APPLICABLE PROVISIONS OF FLORIDA STATUTES, CHAPTER 206.874, AND FLORIDA ADMINISTRATIVE CODE, CHAPTER SF–2.001 DIESEL. FUEL TANK TO BE SIZED FOR 500 GALLONS AND SHALL MEET REQUIREMENTS FOR A COMPLETE INSTALLATION AS PER STATE AND LOCAL REQUIREMENTS.

THE GENERATOR SET AND ENCLOSURE SHALL BE MOUNTED AND SHIPPED TO THE JOBSITE ON THE FORMED STEEL SUB–BASE PROVIDED BY THE GENERATOR SUPPLIER. PROVISIONS FOR CRANE UNLOADING OF THE COMPLETE PACKAGE SHALL BE DESIGNED INTO THE BASE OF THE UNIT. NEOPRENE PADS SHALL BE INSTALLED BETWEEN THE FUEL TANK AND THE CONCRETE SLAB. A 500 GALLON BASE MOUNTED FUEL TANK SHALL BE ATTACHED TO THE CONCRETE SLAB WITH STAINLESS STEEL EXPANSION ANCHORS. THE BASE AND ENCLOSURE ASSEMBLY SHALL ALLOW ROOM WITHIN THE PACKAGE TO MOUNT AND MAINTAIN THE SPECIFIED BATTERY CHARGER, ENGINE STARTING BATTERIES, RACKS, AND CABLES, MAIN LINE CIRCUIT BREAKER, AND ENGINE–GENERATOR CONTROL PANEL, AND OTHER ITEMS AS SPECIFIED OR AS SHOWN ON THE DRAWINGS. THE WEIGHT OF THE ENTIRE UNIT CONSISTING OF GENERATOR SET, BASE, ENCLOSURE, AND ALL OTHER SPECIFIED ITEMS INCLUDING ALL LIQUIDS (I.E., FUEL OIL, LUBE OIL, AND COOLING WATER SHALL BE CALCULATED BY THE MANUFACTURER. THE BASE OF THE UNIT SHALL BE DESIGNED AND MANUFACTURED AS A HEAVY DUTY, FORMED STEEL CONSTRUCTION WITH FOUR (4)POINT LIFTING PROVISION TO SUPPORT THE CALCULATED WEIGHT. DETAILS AND MANUFACTURER'S CERTIFICATION OF THE BASE CONSTRUCTION SHALL BE INCLUDED WITH THE DRAWINGS SUBMITTED FOR APPROVAL AS WELL AS ALL WEIGHT CALCULATIONS. THE UNIT SHALL BE EQUIPPED WITH A DOUBLE WALL IN–BASE UL142 FUEL TANK AND SHALL BE SUPPLIED WITH A LOCKABLE, EXTERIOR LOCATED FILL CAP. ALL NECESSARY FUEL AND VENT LINES WITH VENT CAPS FOR PROPER ENGINE PERFORMANCE SHALL BE PROVIDED AS WELL AS A MEANS TO READILY DETECT THE FUEL LEVEL IN THE TANK WITHOUT THE USE OF A MEASURING STICK. THE FUEL TANK BASE MAXIMUM LENGTH & WIDTH DIMENSIONS SHALL BE AS NOTED ON THE DRAWINGS AND BE FORMED FROM STEEL OF A MINIMUM METAL THICKNESS OF 0.25–INCH (1/4–INCH) AND SHALL BE FITTED WITH LOW FUEL LEVEL INNER WALL LEAK ALARM CONTACT FOR LOCAL AND REMOTE ANNUNCIATION. THE FUEL TANK HEIGHT SHALL NOT EXCEED 24 INCHES.

AUTOMATIC TRANSFER SWITCH

PROVIDE AN AUTOMATIC TRANSFER SWITCH (ATS) AS SHOWN. THE ATS SHALL BE RATED TO CARRY 100 PERCENT OF RATED CURRENT CONTINUOUSLY IN THE ENCLOSURE SUPPLIED, IN AMBIENT TEMPERATURES OF 40 TO +60 DEGREES C, RELATIVE HUMIDITY UP TO 95% (NON CONDENSING), AND ALTITUDES UP TO 1,000 FEET. TRANSFER SWITCH EQUIPMENT SHALL HAVE FAULT CURRENT RATINGS SUITABLE FOR USE IN THE APPLICATION, AS INDICATED BY THE AVAILABLE FAULT CURRENT AT THE SITE AS PER THE ELECTRIC UTILITY.THE ATS SHALL BE A CUMMINS–ONAN 3–POLE OR APPROVED EQUAL.

THE ATS SHALL BE DOUBLE THROW, ELECTRICALLY AND MECHANICALLY INTERLOCKED, AND MECHANICALLY HELD IN THE SOURCE 1 AND SOURCE 2 POSITIONS. THE TRANSFER SWITCH SHALL BE SPECIFICALLY DESIGNED TO TRANSFER TO THE BEST AVAILABLE SOURCE IF IT INADVERTENTLY STOPS IN A NEUTRAL POSITION. THE ATS SHALL BE ELECTRICALLY INTERLOCKED IN BOTH AUTOMATIC AND MANUAL OPERATION MODES TO PERFORM THE OPERATION SEQUENCE SPECIFIED. THE POWER TRANSFER MECHANISM SHALL INCLUDE PROVISIONS FOR MANUAL OPERATION UNDER LOAD WITH THE DOOR OF THE CABINET CLOSED. ALL WIRING SHALL BE TAGGED TO MATCH THE SCHEMATIC, SHALL BE UL LISTED 105 DEGREE C, 600 VOLT RATED, AND SIZED AS REQUIRED. CIRCUIT BOARDS SHALL BE CONNECTED WIRING HARNESSES BY MEANS OF LOCKING DISCONNECT PLUG(S). THE 3–POLE ATS SHALL BE PROVIDED WITH A NEUTRAL BUS AND LUGS SIZED TO CARRY 100% OF THE ATS CURRENT RATING. FIELD CONTROL CONNECTIONS SHALL BE MADE ON A COMMON TERMINAL BLOCK THAT IS CLEARLY AND PERMANENTLY LABELED.

THE ATS SHALL INCORPORATE ADJUSTABLE TIME DELAYS FOR GENERATOR SET START (ADJUSTABLE IN A RANGE FROM 0–15 SECONDS); TRANSFER (ADJUSTABLE IN A RANGE FROM 0–120 SECONDS); RETRANSFER (ADJUSTABLE IN A RANGE FROM 0–30 MINUTES); AND GENERATOR STOP (COOLDOWN; ADJUSTABLE IN A RANGE OF 0–30 MINUTES), AND SHALL BE CONFIGURABLE TO CONTROL THE OPERATION TIME FROM SOURCE TO SOURCE (PROGRAM TRANSITION OPERATION) IN OPEN TRANSITION MODE. THE CONTROL SYSTEM SHALL BE CAPABLE OF ENABLING OR DISABLING THIS FEATURE, AND ADJUSTING THE TIME PERIOD TO A SPECIFIC VALUE. A PHASE BAND MONITOR OR SIMILAR DEVICE IS NOT AN ACCEPTABLE ALTERNATE FOR THIS FEATURE.

THE ATS SHALL PROVIDE AN ISOLATED NORMALLY HELD OPEN, AND CLOSE TO START RELAY CONTACT FOR STARTING OF THE ENGINE–GENERATOR SET. OUTPUT CONTACTS SHALL BE FORM C, FOR COMPATIBILITY. THE ATS SHALL PROVIDE RELAY CONTACTS TO INDICATE THE FOLLOWING CONDITIONS: SOURCE 1 AVAILABLE, LOAD CONNECTED TO SOURCE 1, SOURCE 2 AVAILABLE, SOURCE 2 CONNECTED TO LOAD.

THE ATS ENCLOSURE SHALL BE NEMA 4X 304 STAINLESS STEEL (OR BETTER), UL LISTED AND SHALL PROVIDE NEC REQUIRED WIRE BEND SPACE. THE CABINET DOOR SHALL BE KEY LOCKING. SEPARATE ENCLOSURES SHALL BE THE NEMA TYPE SPECIFIED. MANUAL OPERATING HANDLES AND ALL CONTROL SWITCHES (OTHER THAN KEY OPERATED SWITCHES) SHALL BE ACCESSIBLE TO AUTHORIZED PERSONNEL ONLY BY OPENING THE KEY LOCKING CABINET DOOR.

FACTORY TESTING: THE TRANSFER SWITCH SUPPLIER SHALL PERFORM A COMPLETE OPERATIONAL TEST ON THE TRANSFER SWITCH PRIOR TO SHIPPING FROM THE FACTORY. A CERTIFIED TEST REPORT SHALL BE AVAILABLE ON REQUEST. TEST PROCESS SHALL INCLUDE CALIBRATION OF VOLTAGE SENSORS.

AFTER INSTALLATION, THE SUPPLIER SHALL CONDUCT A COMPLETE OPERATION, BASIC MAINTENANCE, AND EMERGENCY SERVICE SEMINAR FOR UP TO 10 PERSONS EMPLOYED BY THE CITY. THE SEMINAR SHALL INCLUDE INSTRUCTION ON OPERATION OF THE TRANSFER EQUIPMENT, NORMAL TESTING AND EXERCISE, ADJUSTMENTS TO THE CONTROL SYSTEM AND EMERGENCY OPERATION PROCEDURES. THE CLASS DURATION SHALL BE AT LEAST 4 HOURS IN LENGTH, AND INCLUDE PRACTICAL OPERATION WITH THE INSTALLED EQUIPMENT.

REINFORCED CONCRETE EQUIPMENT PADS

PROVIDE BUILT–UP PAD AREA FOR NEW CONCRETE FOUNDATIONS TO ELEVATIONS AS SHOWN. USE CLEAN GRANULAR FILL IN 6–INCH LIFTS. GRANULAR FILL SHALL BE CLEAN SAND WITH NO MORE THAN 10% FINES PASSING THROUGH A NO.200 SIEVE. COMPACT TO 95% RELATIVE COMPACTION PER ASTM D1557. PROVIDE TEST REPORT FROM INDEPENDENT TEST LAB SATISFACTORY TO OWNER AND ENGINEER.

COORDINATE FORM PLACEMENT WITH PIPING AND ELECTRICAL CONDUITS AS SHOWN IN THESE DRAWINGS. FORMWORK FOR SLAB SHALL BE IN ACCORDANCE WITH ACI 347, FOR PLACEMENT OF CONCRETE IN ACCORDANCE WITH ACI 304R.

REINFORCING STEEL SHALL BE DEFORMED BARS IN ACCORDANCE WITH ASTM A615, GRADE 60, PLACED ON SUPPORTS IN ACCORDANCE WITH THE CRSI MANUAL OF STANDARD PRACTICE.

CONCRETE MIX SHALL UTILIZE TYPE II PORTLAND CEMENT WITH NATURAL AGGREGATE MEETING ASTM C150 AND ASTM C33 REQUIREMENTS RESPECTIVELY. THE MINIMUM 28–DAY STRENGTH SHALL BE 4,000 PSI. TAKE SAMPLES DURING POUR AND PROVIDE TEST CYLINDER BREAK REPORT FROM INDEPENDENT TEST LAB.

PLACE CONTROL JOINTS AS SHOWN. ROUND OFF ALL TOP EXPOSED EDGES WITH 0.25–INCH RADIUS EDGING TOOL.

PROTECT SURFACES AND WET CURE CONCRETE FOR A MINIMUM OF 7 DAYS AFTER PLACEMENT.

THE CONCRETE SUPPORT PAD FINISHED GRADE SHALL BE 18" ABOVE BASE FLOOD ELEVATION. FUEL TANK VENTS SHALL BE PROTECTED FROM FLOODING.

THE CITY OF DAYTONA BEACH
UTILITIES DEPARTMENT

THIS SHEET SHOWS THE MINIMUM INFORMATION AND THE BASIC OUTLINE OF FACILITIES REQUIRED. THIS DRAWING IS PROVIDED FOR INFORMATIONAL PURPOSES ONLY. A PROFESSIONAL ENGINEER SHALL BE REQUIRED TO CERTIFY ALL DETAILS.

SUBMERSIBLE SANITARY OR COMBINED SEWER
LIFT STATION
GENERATOR SYSTEM
SPECS & DETAILS
S–24 (Sheet 8 of 8)

FY–15/16	
Drawing Date:	01/16/13
Drawn By:	RRM
Checked By:	SEB
Scale:	NTS
Revision Date:	04/2016
File Name:	S–24 8 of 8
Page 105	

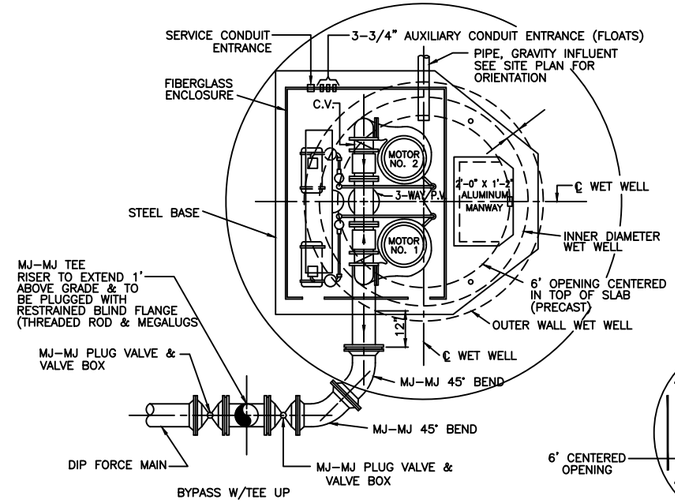

WET WELL PLAN VIEW
(6" DISCHARGE AND ABOVE. SEE NOTE 8)

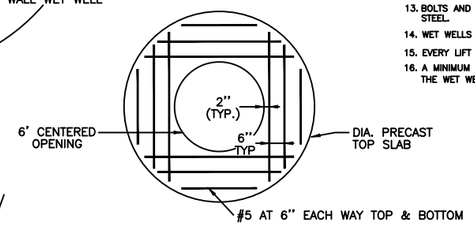

TOP SLAB PLAN
(FOR WETWELLS LARGER THAN 6' IN DIAMETER)

NOTES:

1. WET WELL TO BE LINED WITH AGRU-SURE FIBERGLASS LINING OR APPROVED EQUAL. 8 MILS EXTERNAL THICKNESS AND 16 MILS INTERNAL THICKNESS.
2. ELECTRICAL WIRE SHALL COMPLY WITH ALL APPLICABLE CODES.
3. CONTRACTOR SHALL MAINTAIN A BY-PASS PUMPING SYSTEM THROUGHOUT THIS PROJECT.
4. INSTALLATION OF PIPE INTO WET WELL: THE JOINING OF PIPE TO WET WELLS SHALL BE BY CASTING A SLEEVE INTO THE CENTER OF THE WET WELL WALL. THE SLEEVE SHALL BE A CONTINUOUS 4" RIB USED AS A WATER STOP AND COMPOSED OF EPDM SYNTHETIC RUBBER. THE RUBBER SLEEVE SHALL PROTRUDE AT LEAST 3 1/2" OUTSIDE OF THE WET WELL WALL. AFTER THE PIPE HAS BEEN INSTALLED INSIDE THE RUBBER SLEEVE, THE SLEEVE SHALL BE SECURED OVER THE PIPE BY A NON-MAGNETIC STAINLESS STEEL CLAMP TO PROVIDE WATERTIGHTNESS.
5. THE INTERIOR OF THE WET WELL SHALL BE ACID ETCHED WITH A 25% MURATIC ACID SOLUTION AND THEN NEUTRALIZED PRIOR TO INSTALLING THE FIBERGLASS LINER.
6. BACK FLOW PREVENTION ON WATER IS REQUIRED.
7. SUPPLY ONE PRESSURE TRANSMITTER #2088G1S22A1B4 FROM EMERSON PROCESS MANAGEMENT/ ROSEMOUNT INC. PHONE: 1-800-999-9307 FAX: 952-906-8811
8. ON 4" DISCHARGE, PROVIDE TWO (2) 2-WAY DISCHARGE PLUG VALVE.
9. GATOR-LINER RUBBERIZED COATING TO BE USED AT BASE OF LIFT STATION.
10. EXHAUST FAN GRAINGER MODEL NO. XXXXXXXXXXXXXXXXXXXX
11. ALL STAINLESS STEEL HARDWARE TO BE 316.
12. ENGINEER TO PROVIDE WETWELL VENTILATION DESIGN.
13. BOLTS AND NUTS IN WETWELL AND FOR DISCHARGE DRESSER COUPLING TO BE 316 STAINLESS STEEL.
14. WET WELLS SHALL BE A MINIMUM OF 8 FEET DIAMETER, WITH 8" WALLS.
15. EVERY LIFT STATION SHALL HAVE A SHOPPER PUMP OR A MUFFEN MONSTER.
16. A MINIMUM 6 FEET SHALL BE MAINTAINED BETWEEN THE LOWEST INFLUENT INVERT AND THE WET WELL FLOOR.

DESCRIPTION	PRESENT	FUTURE
WET WELL DIAMETER "A"		
DISCHARGE PIPING DIAMETER		
FORCE MAIN DIAMETER		
INFLUENT PIPE DIAMETER		
INFLUENT INVERT ELEVATION		
BOTTOM SLAB ELEVATION		
HIGH WATER ALARM ELEVATION		
LOW WATER ELEVATION		
LEAD PUMP ON ELEVATION		
LAG PUMP ON ELEVATION		
GROUND ELEVATION		
PUMP CAPACITY - GPM EACH		
TOTAL DYNAMIC HEAD - FEET		
MOTOR HORSEPOWER		
MAXIMUM RPM		

*NOTE: HP REQUIREMENTS MAY VARY WITH PUMP MANUFACTURER.

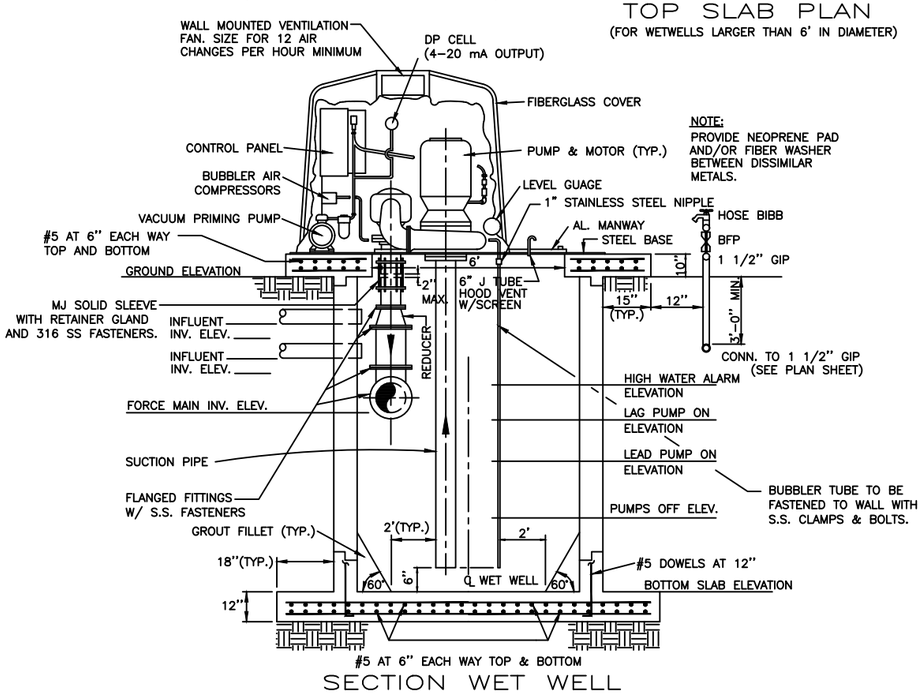

SECTION WET WELL

ALL PIPE IN WET WELL SHALL BE PLASTIC OR SS

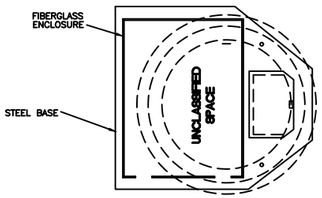

WET WELL PLAN VIEW

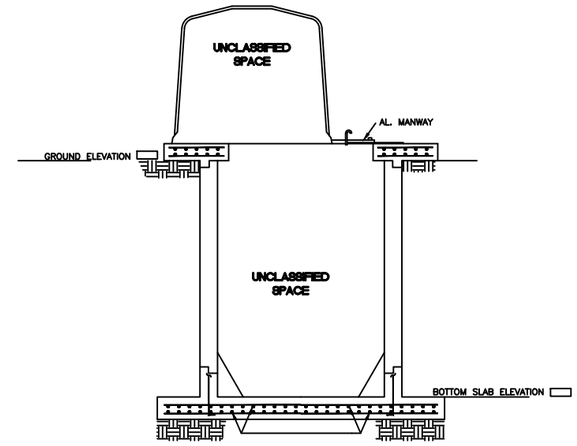

SECTION WET WELL
NFPA CLASSIFICATION BOUNDARY

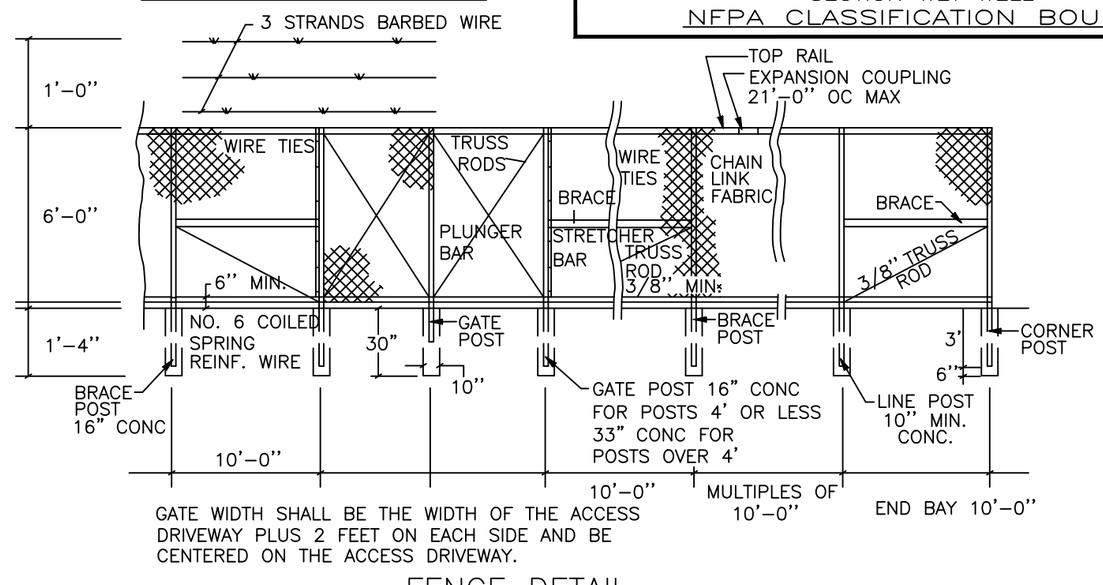

GATE WIDTH SHALL BE THE WIDTH OF THE ACCESS DRIVEWAY PLUS 2 FEET ON EACH SIDE AND BE CENTERED ON THE ACCESS DRIVEWAY.

FENCE DETAIL

NEXT

RETURN TO TOC

THE CITY OF DAYTONA BEACH
UTILITIES DEPARTMENT

THIS SHEET SHOWS THE MINIMUM INFORMATION AND THE BASIC OUTLINE OF FACILITIES REQUIRED. THIS DRAWING IS PROVIDED FOR INFORMATIONAL PURPOSES ONLY. A PROFESSIONAL ENGINEER SHALL BE REQUIRED TO CERTIFY ALL DETAILS.

WETWELL MOUNTED RESIDENTIAL WASTEWATER
LIFT STATION
STANDARD
DETAIL
S-25 (Sheet 1 of 7)

FY: 15/16	
Drawing Date: 01/08	
Drawn By: KLH	
Checked By: JMP	
Scale: NTS	
Revision Date: 07/10	
File Name: S-25 1 of 7	
Page 106	

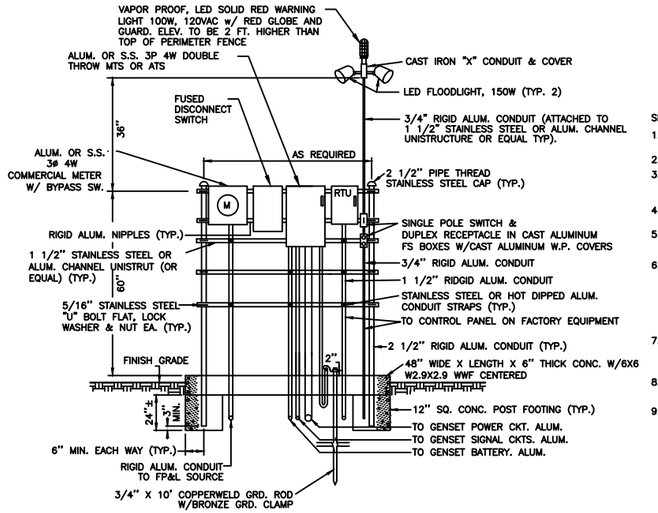

ELECTRICAL SERVICE PANEL RACK

SERVICE PANEL NOTES

1. ALL CONDUIT & FITTINGS WITHIN 12" OF EQUIPMENT PAD AND ABOVE GRADE TO BE RIGID ALUMINUM.
2. SIZE FUSES BY MANUFACTURER'S RECOMMENDATIONS.
3. BREAKERS, CONDUITS, WIRE & EQUIPMENT TO BE SIZED PER MANUFACTURER'S RECOMMENDATION AND/OR CODE REQUIREMENTS.
4. ALL MOUNTING HARDWARE STAINLESS STEEL W/FLAT, LOCK WASHERS & NUTS.
5. MOUNT BLACKBURN REMOTE TELEMETRY UNIT (RTI) ON SERVICE PANEL RACK AS SHOWN.
6. CONTRACTOR SHALL SUBMIT SIGNED AND SEALED WIND LOAD CALCULATIONS FROM A STRUCTURAL ENGINEER LICENSED IN THE STATE OF FLORIDA. SERVICE PANEL RACK TO BE CERTIFIED PER THE FLORIDA BUILDING CODE.
7. ABOVE GRADE ALUMINUM CONDUIT TO BE TRANSITIONED TO PVC SCHEDULE 80 BELOW GRADE. THIS APPLIES FOR NON-SIGNAL CONDUITS.
8. ALL CONTROL PANELS SHALL BE U.L. LABELED AND SHALL COMPLY WITH ARTICLE 409 OF THE N.E.C.
9. AN ESSEX PHONE LINE MUST BE PROVIDED WITH ALL RTU FROM AT&T. ALSO MUST COORDINATE WITH THE CITY'S IT DEPARTMENT ABOUT PHONE INFORMATION.

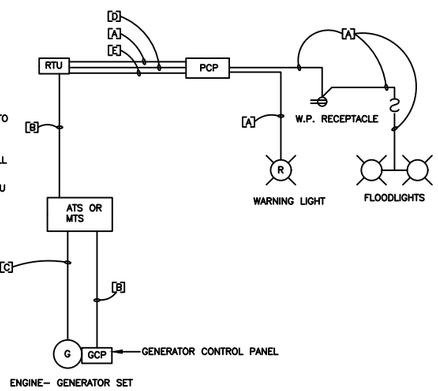

[A]=[3/4"C., 2#12,1#12G] AC POWER, 120 V.
[B]=[3"C., 4#14, 1#12G.] SIGNAL CKTS, GENSET TO RTU & ATS
[C]=[3/4"C., 2#12 & 1#12GND FOR BATTERY CHARGER] & [1"C., 2#10 & 1#10GND FOR JACKET WATER HEATER]
[D]=[1"C., 10#14, 1#14G] STATUS SIGNALS, PCP TO RTU
[E]=[1"C., 2#16 TWISTED SHIELDED PAIR] ANALOG SIGNALS, PCP TO RTU

120V & SIGNAL RISER DIAGRAM

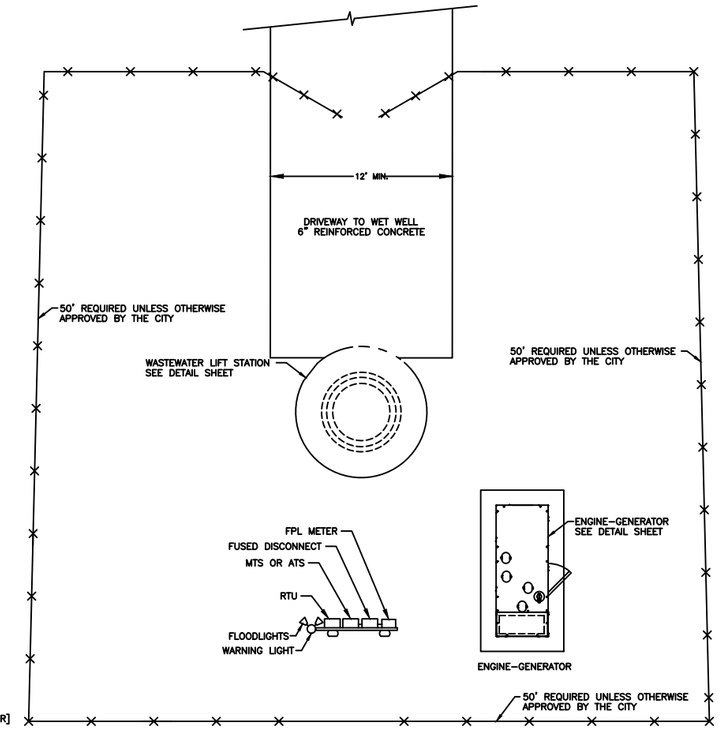

TYPICAL SITE PLAN

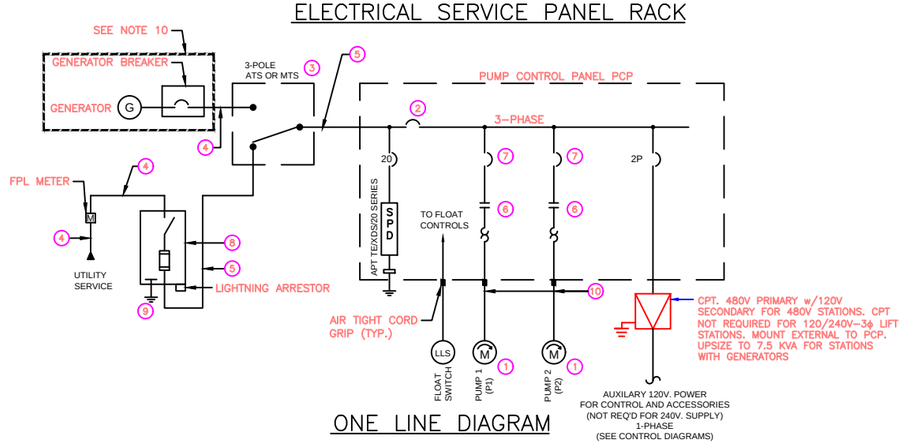

ONE LINE DIAGRAM

PROPOSED VOLTAGE (1)	PROPOSED MOTOR SIZE (HP) (2)	PANEL MAIN BKR. (3)	MTS OR ATS (4)	SERVICE CONDUIT & CONDUCTORS (5)	LOAD CONDUIT & CONDUCTORS (6)	STARTER SIZE (7)	MOTOR BREAKER (8)	FUSED DISC/FUSES (SEE NOTES) (10)	GROUND (11)	PUMP CABLE CONDUIT SIZE
480V, 3ø, 3W	50 HP ≥ 25 HP	200A,3P	200A,3P	4#3/0-2"	3#3/0 & 1#4GND-2"	3	125A,3P	200A,3P/200A	#2	PER N.E.C.
480V, 3ø, 3W	10HP ≤ X < 25 HP	200A,3P	200A,3P	4#3/0-2"	3#3/0 & 1#4GND-2"	2	70A,3P	200A,3P/200A	#2	PER N.E.C.
480V, 3ø, 3W	X < 10 HP	200A,3P	200A,3P	4#3/0-2"	3#3/0 & 1#4GND-2"	1	30A,3P	200A,3P/200A	#2	PER N.E.C.
240V, 3ø, 3W	15HP ≤ X ≤ 20 HP	200A,3P	200A,3P	4#3/0-2"	3#3/0 & 1#4GND-2"	3	125A,3P	200A,3P/200A	#2	PER N.E.C.
240V, 3ø, 3W	7.5HP ≤ X < 15 HP	100A,3P	100A,3P	4#2-1 1/2"	3#2 & 1#6GND-1 1/2"	2	80A,3P	100A,3P/100A	#6	PER N.E.C.
240V, 3ø, 3W	X < 7.5 HP	100A,3P	100A,3P	4#2-1 1/2"	3#2 & 1#6GND-1 1/2"	1	50A,3P	100A,3P/100A	#6	PER N.E.C.

NOTE: SOLID STATE SOFT STARTERS SHALL BE PROVIDED FOR MOTOR SIZES ABOVE 50 HP.

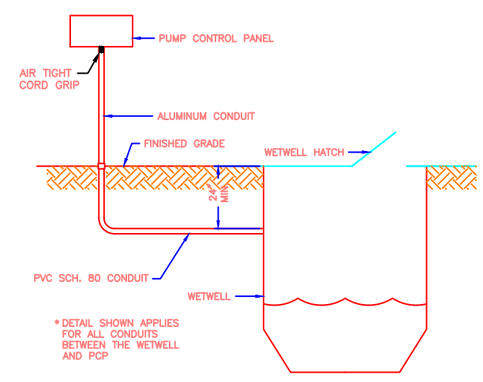

CONDUIT INSTALLATION DETAIL

GENERAL NOTES:

1. PROVIDE ELECTRICAL SERVICE PANEL RACK CONFIGURED WITH ELECTRICAL DISTRIBUTION EQUIPMENT, EMERGENCY POWER AUTOMATIC TRANSFER SWITCH (ATS), REMOTE TERMINAL UNIT, AND APPURTENANCES AS SHOWN.
2. ALL CONDUCTORS SHALL BE STRANDED COPPER WITH THHN INSULATION FOR CIRCUITS UNDER 600 VOLTS.
3. ALL MOUNTING HARDWARE SHALL BE STAINLESS STEEL.
4. UNDERGROUND CONDUITS SHALL BE INSTALLED WITH 24 INCHES OF COVER, MINIMUM.
5. PROVIDE ONE COPPER-CLAD GROUND ROD, 5/8 INCHES BY 10 FEET AND ONE #6 BARE COPPER CONDUCTOR FROM GROUND ROD TO GROUND LUG OR BUS AT EACH OF THREE LOCATIONS: ENGINE-GENERATOR, PUMP STATION, AND ELECTRICAL SERVICE PANEL RACK.
6. ALL OUTDOOR ENCLOSURES SHALL BE FACTORY PAINTED WHITE, NEMA 4X, 304 STAINLESS STEEL OR BETTER. ENCLOSURES UNDER THE PUMP HOUSE ENCLOSURE SHALL BE NEMA 4X 304 STAINLESS STEEL PROVIDED BY THE PUMP SUPPLIER AS A PART OF THE PUMP PACKAGE. THE CONTROL PANEL SHALL CONTAIN STARTERS AND OTHER DEVICES FOR THE WASTEWATER PUMPS, PRIMING PUMPS, BUBBLER SYSTEM, AND APPURTENANCES. THE PANEL SHALL ALSO PROVIDE 120 V POWER FOR THE LIGHTING, RECEPTACLE, AND OTHER MISCELLANEOUS NEEDS OF THE SITE.
7. ALL WORK SHALL BE PERFORMED IN ACCORDANCE WITH THE FLORIDA BUILDING CODE, AND THE NATIONAL ELECTRIC CODE.
8. NO FENCE IS REQUIRED ON LS IN RESIDENTIAL SUBDIVISIONS. ALL INDUSTRIAL AND COMMERCIAL APPLICATIONS SHALL BE FENCED.
9. CONTRACTOR TO PROVIDE SHOP DRAWINGS FOR REVIEW AND APPROVAL.
10. GENERATOR AND GENERATOR BREAKER SHALL BE SIZED TO ACCOMMODATE THE TOTAL CONNECTED LOAD. THE GENERATOR SHALL NOT EXCEED 80% OF ITS RUNNING CAPACITY WITH ALL CONNECTED LOADS ON-LINE. ENGINEER SHALL BE RESPONSIBLE FOR SIZING OF THE GENERATOR. THE SIZING OF THE GENERATOR PAPER WORK SHALL BE SIGNED AND SEALED BY AN ELECTRICAL ENGINEER.

NEXT PREV

RETURN TO TOC

THE CITY OF DAYTONA BEACH
UTILITIES DEPARTMENT

THIS SHEET SHOWS THE MINIMUM INFORMATION AND THE BASIC OUTLINE OF FACILITIES REQUIRED. THIS DRAWING IS PROVIDED FOR INFORMATIONAL PURPOSES ONLY. A PROFESSIONAL ENGINEER SHALL BE REQUIRED TO CERTIFY ALL DETAILS.

WETWELL MOUNTED RESIDENTIAL WASTEWATER
LIFT STATION
CONTROL & RTU
DIAGRAMS
S-25 (Sheet 2 of 7)

FY-15/16	
Drawing Date:	01/16/13
Drawn By:	KLH
Checked By:	JMP
Scale:	NTS
Revision Date:	07/10
File Name:	S-25 2 of 7
Page	107

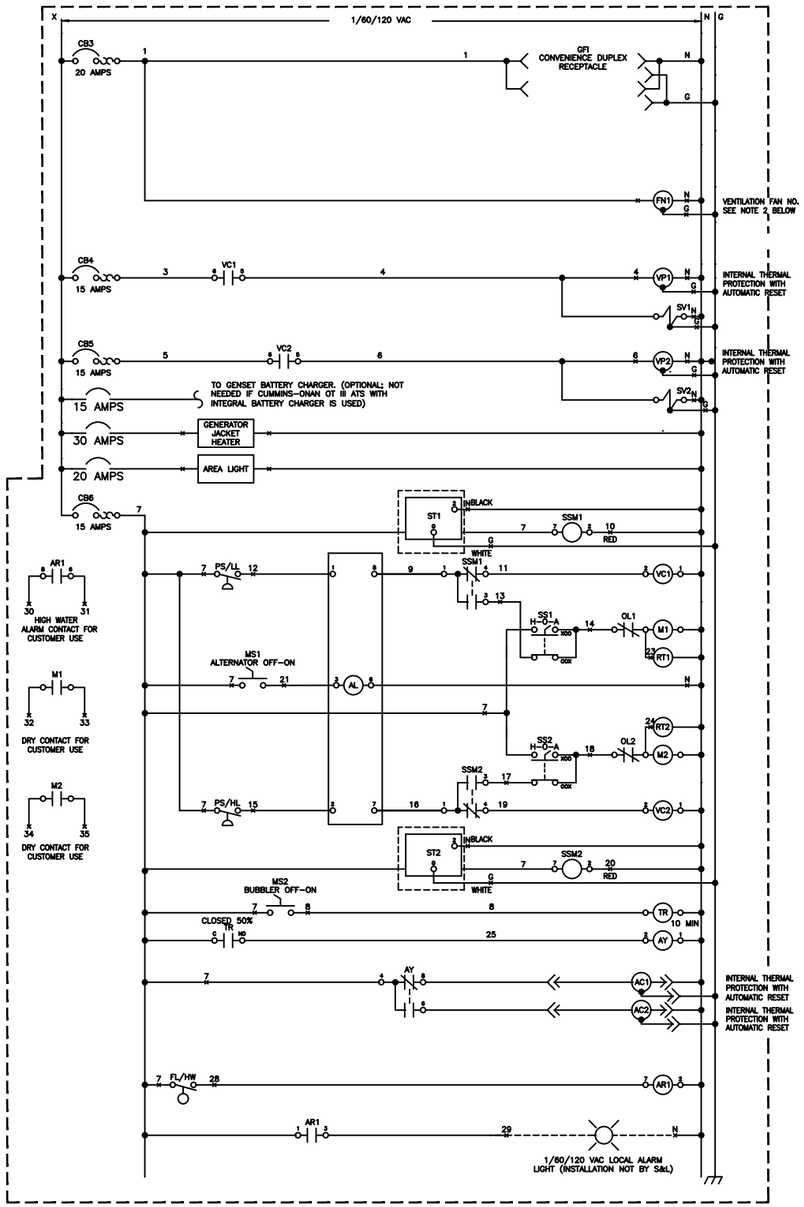

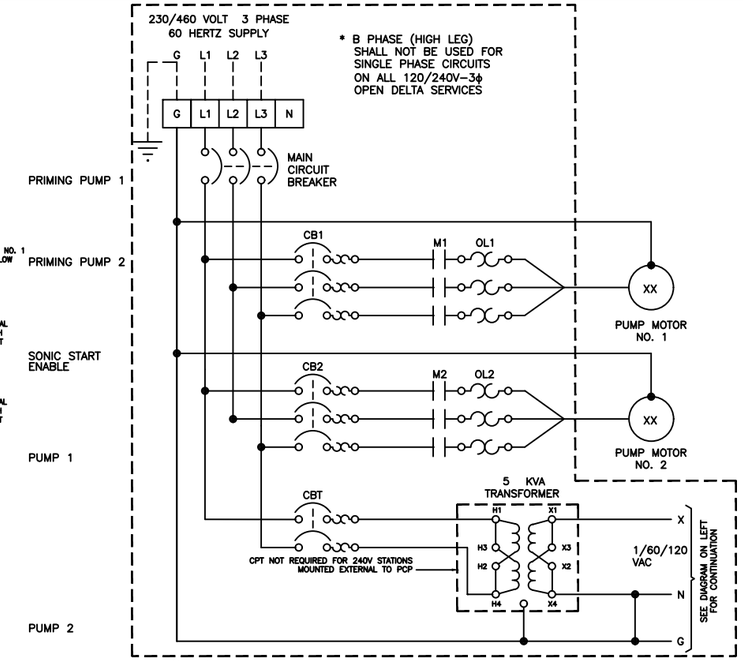

LEGEND

A	ALARM LIGHT OR HORN	SS2	SELECTOR SWITCH; MTR. NO.2 HAND-OFF-AUTO
AL	PUMP ALTERNATOR	SV1	SOLENOID VALVE NO.1
ALR	ALTERNATOR CONTROL RELAY	SV2	SOLENOID VALVE NO.2
CB1	CIRCUIT BREAKER; MOTOR NO.1	ST1	SONIC START LEVEL SWITCH
CB2	CIRCUIT BREAKER; MOTOR NO.2	ST2	SONIC START LEVEL SWITCH
CB3	CIRCUIT BREAKER; AUXILIARY EQUIPMENT	SSM1	SONIC START MODULE
CB4	CIRCUIT BREAKER; VACUUM PUMP NO.1	SSM2	SONIC START MODULE
CB5	CIRCUIT BREAKER; VACUUM PUMP NO.2	T1	HEATER THERMOSTAT
CB6	CIRCUIT BREAKER; CONTROL	T2	FAN THERMOSTAT
ER1	ELECTRODE RELAY; PUMP NO.1	TC	TIMED CLOSING CONTACT
ER2	ELECTRODE RELAY; PUMP NO.2	VC1	VACUUM CONTACTOR; NO.1 PRIMING SYSTEM
FN	FAN	VC2	VACUUM CONTACTOR; NO.2 PRIMING SYSTEM
FS/HL	FLOAT SWITCH; HIGH LEVEL ALARM	VP1	VACUUM PUMP NO.1
FS/OFF	FLOAT SWITCH; PUMPS OFF	VP2	VACUUM PUMP NO.2
GFI	GROUND FAULT INTERRUPT		
HTR	HEATER		
M1	MOTOR STARTER NO.1		
M2	MOTOR STARTER NO.2		
MS1	MANUAL SWITCH; PUMP ALTERNATOR		
OL1	OVERLOAD RELAY; NO.1 MOTOR STARTER		
OL2	OVERLOAD RELAY; NO.2 MOTOR STARTER		
RT1	RUNNING (ELAPSED) TIME METER; NO.1 PUMP		
RT2	RUNNING (ELAPSED) TIME METER; NO.2 PUMP		
SS1	SELECTOR SWITCH; MTR. NO.1 HAND-OFF-AUTO		

—×— TERMINAL BLOCK CONNECTION (DENOTES CONDUCTOR ENTERING OR LEAVING ENCLOSURE.)

TYPICAL EXAMPLE
PUMP STATION CONTROL PANEL

NOTES:

1. CONTROL DIAGRAMS SHOWN ARE BASED UPON INFORMATION PROVIDED FROM LIFT STATION SUPPLIER AND RTU SUPPLIER AS PROVIDED FOR CITY OF DAYTONA BEACH PROJECTS.
2. SIZED FOR 12 AIR CHANGES PER HOUR, MINIMUM. FAN RUNS CONTINUOUS.
3. COMPONENT SPECIFICATIONS:
   - RENA 301 AIR COMPRESSOR
   - COMPOUND PRESSURE GAUGE w/DIAPHRAM SEAL FOR EACH PUMP
   - ALLEN BRADLEY NEMA RATED STARTERS
   - ALTERNATOR – TIME MARK DX261 OR EQUAL
   - ALLEN BRADLEY 836 PRESSURE SWITCHES
   - AIR BLOWER – ITDR3 GRAINGER

REMOTE TERMINAL UNIT (RTU) DIAGRAM

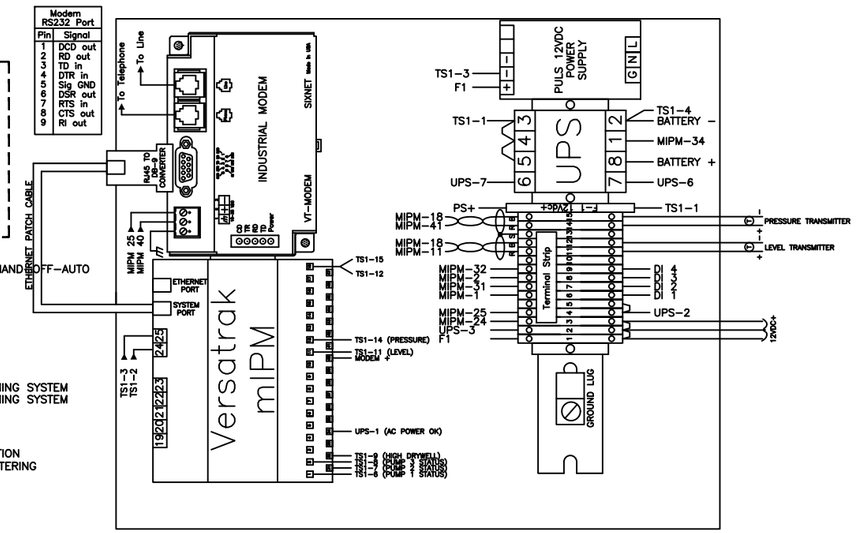

SUPPLY ONE
REMOTE TELEMETRY UNIT

SIXNET
VX-MBI CPV2
VERSAMUX
REMOTE TERMINAL UNIT
MODEL # VX1201210
BLACKBURN CONTROLS
(407)847-8848

NEXT PREV

RETURN TO TOC

THE CITY OF DAYTONA BEACH
UTILITIES DEPARTMENT

THIS SHEET SHOWS THE MINIMUM INFORMATION AND THE BASIC OUTLINE OF FACILITIES REQUIRED. THIS DRAWING IS PROVIDED FOR INFORMATIONAL PURPOSES ONLY. A PROFESSIONAL ENGINEER SHALL BE REQUIRED TO CERTIFY ALL DETAILS.

WETWELL MOUNTED RESIDENTIAL WASTEWATER
LIFT STATION
CONTROL & RTU
DIAGRAMS
S-25 (Sheet 3 of 7)

FY-15/16	
Drawing Date:	01/08
Drawn By:	KLH
Checked By:	JMP
Scale:	NTS
Revision Date:	
File Name:	S-25 3 of 7
Page 108	

LSPro - Daytona Monitor ONLY

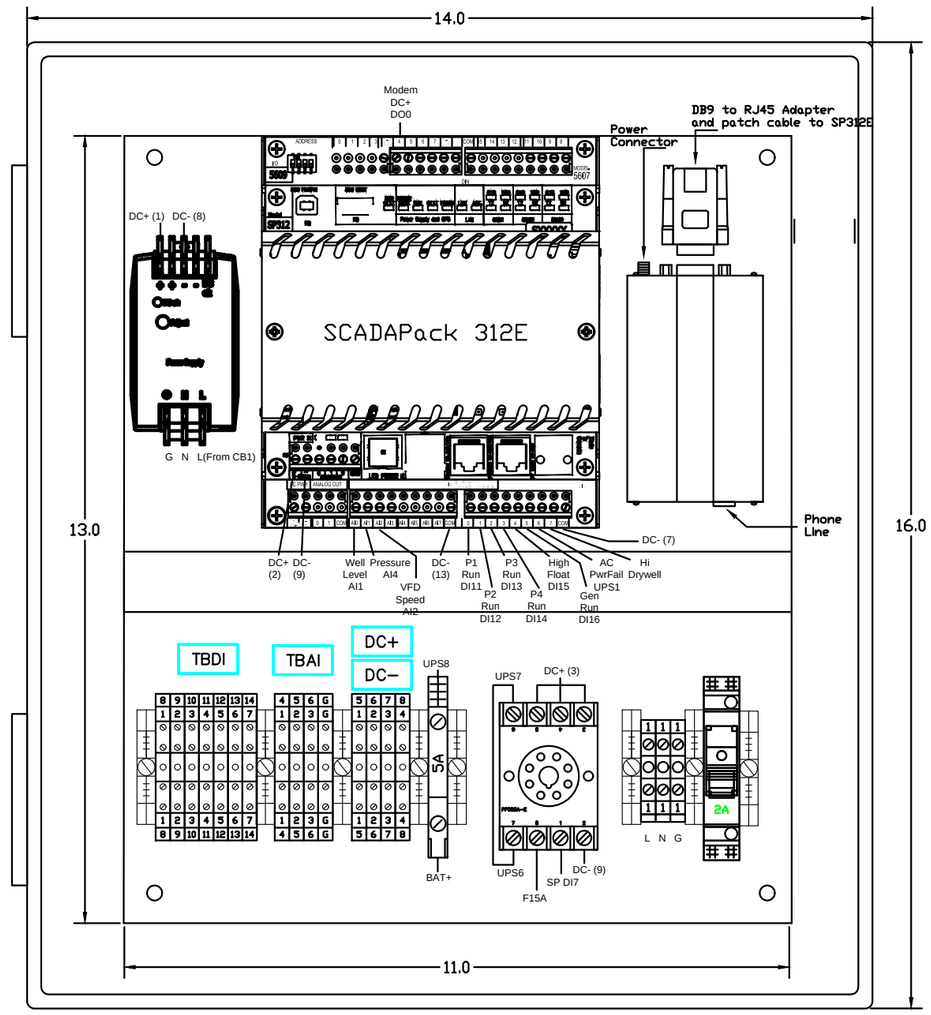

DATE	REVISION	BY	CH'D
5/26/2015	SHOP DRAWINGS	PS	
	Copyright 2016 BCI Technologies All Rights Reserved - LSMonitor		

BCI TECHNOLOGIES

The information, specifications and data contained in this drawing are furnished by and are to remain the property of BCI Technologies. The acceptor warrants that no use will be made of the same except to facilitate the installation, maintenance and operation of the equipment represented by said drawing.

TOLERANCES (UNLESS OTHERWISE SPECIFIED)

CUSTOMER: CITY OF DAYTONA BEACH

TITLE: LIFT STATION RTU w/SP312E

SCALE:	DRAWN BY:	CHECKED BY:	APP'D BY:
N/A	JB		
DATE: 3/21/2014	SHEET 1 OF SHEETS	DRAWING NO. LS-Monitor-PL-001-03 with SP312E	

NEXT PREV

RETURN TO TOC

THE CITY OF DAYTONA BEACH
UTILITIES DEPARTMENT

THIS SHEET SHOWS THE MINIMUM INFORMATION AND THE BASIC OUTLINE OF FACILITIES REQUIRED. THIS DRAWING IS PROVIDED FOR INFORMATIONAL PURPOSES ONLY. A PROFESSIONAL ENGINEER SHALL BE REQUIRED TO CERTIFY ALL DETAILS.

WETWELL MOUNTED RESIDENTIAL WASTEWATER
LIFT STATION
RTU W/SP312E
DIAGRAMS
S-25 (Sheet 4 of 7)

FY-15/16
Drawing Date: 03/14
Drawn By: KLH
Checked By: JMP
Scale: NTS
Revision Date:
File Name: S-25 4 of 7
Page 109

LSPro - Daytona Monitor ONLY

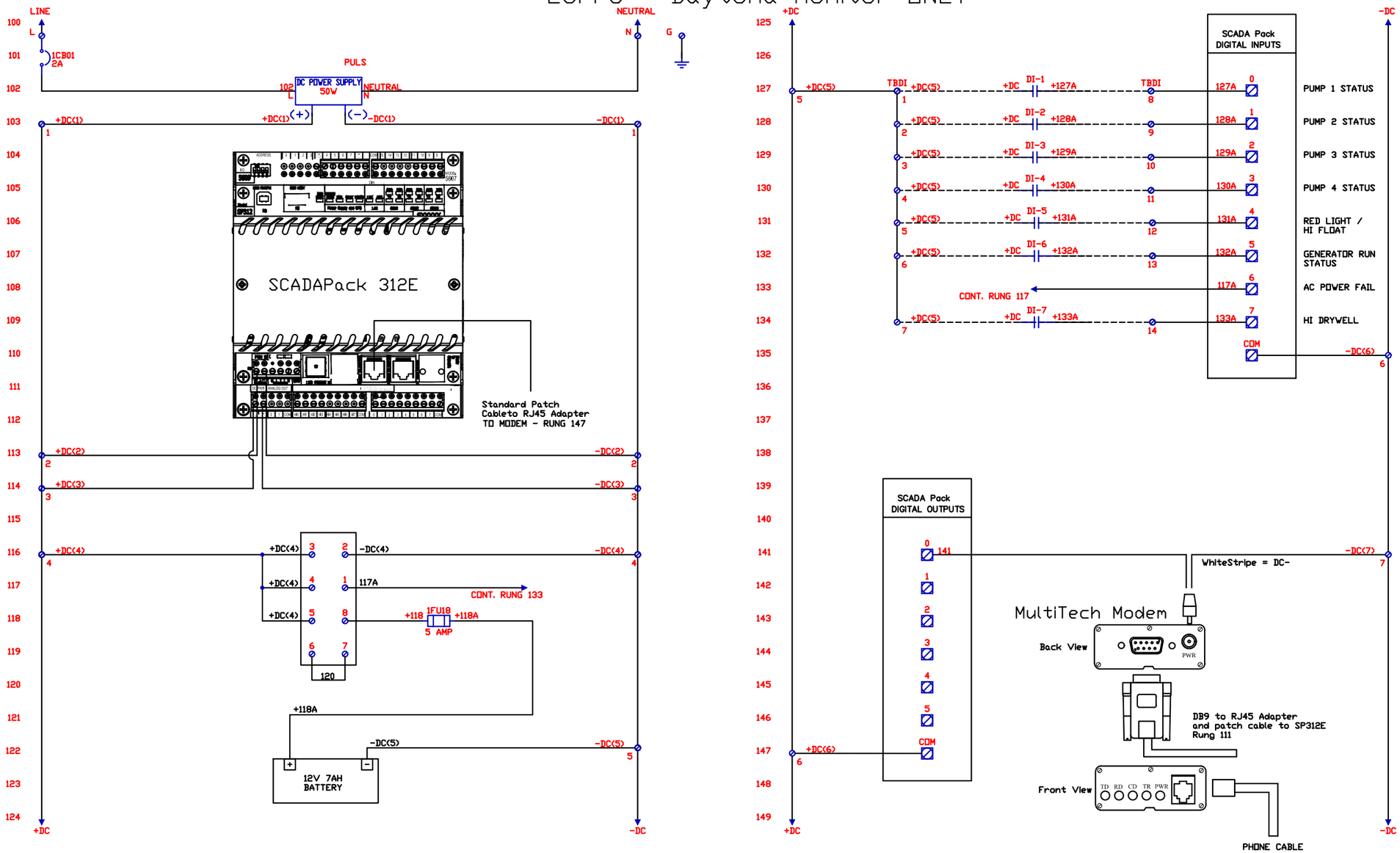

DATE	REVISION	BY	CH'D
5/26/2015	SHOP DRAWINGS	PS	

Copyright 2016 BCI Technologies All Rights Reserved - LSMonitor

BCI TECHNOLOGIES

The information, specifications and data contained in this drawing are furnished by and are to remain the property of BCI Technologies. The acceptor warrants that no use will be made of the same except to facilitate the installation, maintenance and operation of the equipment represented by said drawing.

TOLERANCES (UNLESS OTHERWISE SPECIFIED)

CUSTOMER: CITY OF DAYTONA BEACH

TITLE: LIFT STATION RTU w/SP312E

SCALE:	DRAWN BY:	CHECKED BY:	APP'D BY:
N/A	JB		
DATE: 3/21/2014	SHEET 1 OF SHEETS	DRAWING NO. 40067-EE-001-01 with SP312E	

THE CITY OF DAYTONA BEACH
UTILITIES DEPARTMENT

THIS SHEET SHOWS THE MINIMUM INFORMATION AND THE BASIC OUTLINE OF FACILITIES REQUIRED. THIS DRAWING IS PROVIDED FOR INFORMATIONAL PURPOSES ONLY. A PROFESSIONAL ENGINEER SHALL BE REQUIRED TO CERTIFY ALL DETAILS.

WETWELL MOUNTED RESIDENTIAL WASTEWATER
LIFT STATION
RTU W/SP312E
DIAGRAMS
S-25 (Sheet 5 of 7)

FY-15/16
Drawing Date: 03/14
Drawn By: KLH
Checked By: JMP
Scale: NTS
Revision Date:
File Name: S-25 5 of 7
Page 110

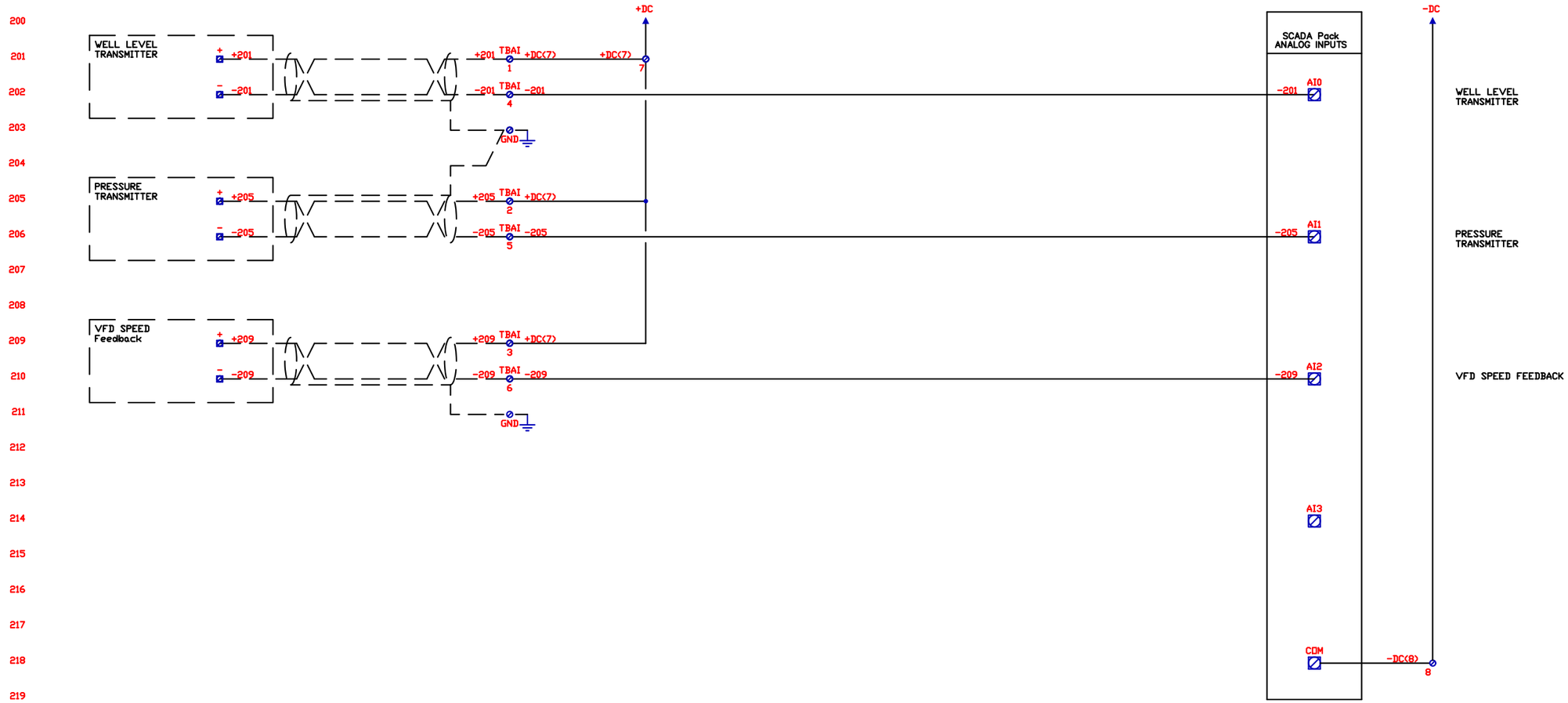

DATE	REVISION	BY	CH'D
5/26/2015	SHOP DRAWINGS	PS	
	Copyright 2016 BCI Technologies All Rights Reserved - LSMonitor		

BCI TECHNOLOGIES

The information, specifications and data contained in this drawing are furnished by and are to remain the property of BCI Technologies. The acceptor warrants that no use will be made of the same except to facilitate the installation, maintenance and operation of the equipment represented by said drawing.

TOLERANCES (UNLESS OTHERWISE SPECIFIED)

CUSTOMER: CITY OF DAYTONA BEACH

TITLE: LIFT STATION RTU wSP312E

SCALE	DRAWN BY:	CHECKED BY:	APP'D BY:
N/A	JB		
DATE: 3/21/2014	SHEET 2 OF SHEETS 2	DRAWING NO. 40067-EE-002-01 with SP312E	

NEXT PREV

RETURN TO TOC

THE CITY OF DAYTONA BEACH
UTILITIES DEPARTMENT

THIS SHEET SHOWS THE MINIMUM INFORMATION AND THE BASIC OUTLINE OF FACILITIES REQUIRED. THIS DRAWING IS PROVIDED FOR INFORMATIONAL PURPOSES ONLY. A PROFESSIONAL ENGINEER SHALL BE REQUIRED TO CERTIFY ALL DETAILS.

WETWELL MOUNTED RESIDENTIAL WASTEWATER
LIFT STATION
RTU W/SP312E
DIAGRAMS
S-25 (Sheet 6 of 7)

FY-15/16
Drawing Date: 03/14
Drawn By: KLH
Checked By: JMP
Scale: NTS
Revision Date:
File Name: S-25 6 of 7
Page 111

ENGINE–GENERATOR SYSTEM

PROVIDE A COMPLETE FACTORY ASSEMBLED ENGINE–GENERATOR UNIT TO PROVIDE AUTOMATIC STANDBY ELECTRICAL POWER FOR THE PUMPING STATION. AN AUTOMATIC TRANSFER SWITCH (ATS) SHALL ALSO BE PROVIDED TO SENSE LOSS OF UTILITY POWER AND TO INITIATE AUTOMATIC START OF THE ENGINE–GENERATOR UNIT AND THE TRANSFER OF POWER FROM THE UTILITY FEED. ALSO PROVIDE DRY CONTACT ENGINE START ENABLE TO RECEIVE A RUN SIGNAL UPON HIGH WETWELL LEVEL FROM LEVEL FLOAT IN LIFT STATION. ~~PROVIDE CONTACTS IN THE ENGINE–GENERATOR CONTOL PANEL TO SIGNAL COOLDOWN/SHUTDOWN UPON LOW LEVEL IN PUMP STATION FROM LIFT PUMP LOW LEVEL SHUTOFF.~~

PROVIDE COMPLETE ENGINE FUEL SYSTEM, ELECTRONIC GOVERNOR SYSTEM, ENGINE COOLING SYSTEM, ELECTRIC STARTING SYSTEM COMPLETE WITH BATTERIES AND CHARGING SYSTEM, EXHAUST SYSTEM WITH SILENCER, VIBRATION ISOLATION SYSTEM, DIGITAL (MICROPROCESSOR–BASED) ELECTRONIC CONTROLS, OUTPUT METERING (RMS VOLTAGE, CURRENT, FREQUENCY, POWER FACTOR, AND KW HOURS), SOUND–INSULATED OUTDOOR WEATHER–PROOF ENCLOSURE, AND OTHER REQUIRED APPURTENANCES, ALL OF WHICH SHALL BE MOUNTED ON A HEAVY–DUTY STEEL BASE WHICH SHALL BE FIELD MOUNTED ON A CAST IN PLACE CONCRETE FOUNDATION AS SHOWN.

THE ENGINE SHALL BE A DIESEL FUELED, RADIATOR AND FAN COOLED. MINIMUM DISPLACEMENT SHALL BE 256 CUBIC INCHES, WITH A CAST IRON BLOCK V–CONFIGURATION FOR 6 CYLINDERS. THE HORSEPOWER RATING OF THE ENGINE AT IT'S MINIMUM TOLERANCE LEVEL SHALL BE SUFFICIENT TO DRIVE THE ALTERNATOR AND ALL CONNECTED ACCESSORIES.

THE AC GENERATOR SHALL BE; SYNCHRONOUS, FOUR POLE, 2/3 PITCH, REVOLVING FIELD, DRIP–PROOF CONSTRUCTION, SINGLE PRELUBRICATED SEALED BEARING, AIR COOLED BY A DIRECT DRIVE CENTRIFUGAL BLOWER FAN, AND DIRECTLY CONNECTED TO THE ENGINE WITH FLEXIBLE DRIVE DISC. ALL INSULATION SYSTEM COMPONENTS SHALL MEET NEMA MG1 TEMPERATURE LIMITS FOR CLASS H INSULATION SYSTEM. ACTUAL TEMPERATURE RISE MEASURED BY RESISTANCE METHOD AT FULL LOAD SHALL NOT EXCEED 105 DEGREES CENTIGRADE.

THE GENERATOR SET SHALL BE PROVIDED WITH AN OUTDOOR, ALUMINUM SOUND–ATTENUATED ENCLOSURE. THE ENCLOSURE SHALL REDUCE THE SOUND LEVEL OF THE GENERATOR SET WHILE OPERATING AT FULL RATED LOAD TO A MAXIMUM OF 85 DBA AT ANY LOCATION 21 FT FROM THE GENERATOR SET IN A FREE FIELD ENVIRONMENT. THE ENCLOSURE PACKAGE SHALL COMPLY WITH THE REQUIREMENTS OF THE NATIONAL ELECTRICAL CODE FOR ALL WIRING MATERIALS AND COMPONENT SPACING. ALL DOORS SHALL BE LOCKABLE, AND INCLUDE RETAINERS TO HOLD THE DOOR OPEN DURING SERVICE. ENCLOSURE ROOF SHALL BE CAMBERED TO PREVENT RAINWATER ACCUMULATION. OPENINGS SHALL BE SCREENED TO LIMIT ACCESS OF RODENTS INTO THE ENCLOSURE. PROVIDE CHART OF AVAILABLE COLOR SELECTIONS FOR SELECTION OF ENCLOSURE COLOR BY THE OWNER.

ALL ELECTRICAL POWER AND CONTROL INTERCONNECTIONS SHALL BE MADE WITHIN THE PERIMETER OF THE ENCLOSURE. A FACTORY–MOUNTED EXHAUST SILENCER SHALL BE INSTALLED INSIDE THE ENCLOSURE. ALL SHEET METAL SURFACES SHALL BE PRIMED FOR CORROSION PROTECTION AND FINISH PAINTED WITH THE MANUFACTURERS STANDARD COLOR USING A TWO STEP ELECTROCOATING PAINT PROCESS. THE PAINTING PROCESS SHALL RESULT IN A COATING THAT MEETS THE FOLLOWING REQUIREMENTS:
PRIMER THICKNESS, 0.5–2.0 MILS.
TOP COAT THICKNESS, 0.8–1.2 MILS.
GLOSS, PER ASTM D523–89, 80% PLUS OR MINUS 5%.
GLOSS RETENTION AFTER ONE YEAR SHALL EXCEED 50%.
CROSSHATCH ADHESION, PER ASTM D3359–93, 4B–5B.
IMPACT RESISTANCE, PER ASTM D2794–93, 120–160 INCH–POUNDS.
SALT SPRAY, PER ASTM B117–90, 1000+ HOURS.
HUMIDITY, PER ASTM D2247–92, 1000+ HOURS.

THE ENGINE–GENERATOR UNIT SHALL INCLUDE THE NECESSARY FEATURES TO MEET THE REQUIREMENTS OF NFPA 70, NFPA 110, AND IEEE 446. THE UNIT SHALL BE MANUFACTURED BY CUMMINS OR CATERPILLAR.

THE ENGINE–GENERATOR PERFORMANCE SHALL MEET THE FOLLOWING CRITERIA:

RATED POWER OUTPUT (STANDBY):	SIZED TO MEET LIFT STATION DEMAND
OUTPUT VOLTAGES (NOTE: MATCH UTILITY VALUES):	3–PHASE, 60 HZ, 4 WIRE
RATED SPEED:	1,800 RPM
MAXIMUM DIESEL CONSUMPTION AT FULL LOAD:	ENGINEER TO SIZE. MIN. 3 DAY SUPPLY OF DIESEL @ MAX. DESIGN LOAD OF LIFT STATION.
VOLTAGE REGULATION, NO LOAD TO FULL LOAD:	+/– 1.0%
RANDOM VOLTAGE VARIATION:	+/– 1.0%
FREQUENCY REGULATION:	ISOCHRONOUS
RANDOM FREQUENCY VARIATION:	+/– 0.6%
OPERATE AT FULL LOAD FOR AMBIENT CONDITIONS:	100 DEG F, AT 100' MSL
EXCITATION	PMG

THE ENGINE–GENERATOR SET SHALL START ON RECEIPT OF A START SIGNAL FROM THE AUTOMATIC TRANSFER SWITCH. THE START SIGNAL SHALL BE VIA HARDWIRED CONNECTION TO THE GENERATOR SET CONTROL, AND THE UNIT SHALL COMPLETE A TIME DELAY START PERIOD AS PROGRAMMED INTO THE CONTROL. THE GENERATOR SET CONTROL SHALL INITIATE THE STARTING SEQUENCE WHICH SHALL INCLUDE:
VERIFICATION THAT THE ENGINE IS ROTATING WHEN THE STARTER IS SIGNALED.
ENGINE START AND ACCELERATION TO START DISCONNECT SPEED. (IF THE ENGINE DOES NOT START, IT SHALL COMPLETE A CYCLE CRANKING PROCESS.
IF THE ENGINE DOES NOT START IT SHALL BE SHUT DOWN AND LOCKED OUT, AND THE CONTROL SYSTEM SHALL INDICATE "FAIL TO START"; THE ENGINE SHALL ACCELERATE TO RATED SPEED AND THE ALTERNATOR TO RATED VOLTAGE. EXCITATION SHALL BE DISABLED UNTIL THE ENGINE HAS EXCEEDED PROGRAMMED IDLE SPEED, AND REGULATED TO PREVENT OVER VOLTAGE CONDITIONS AND OSCILLATION AS THE ENGINE ACCELERATES AND THE ALTERNATOR BUILDS TO RATED VOLTAGE.
UPON REACHING RATED SPEED AND VOLTAGE, THE GENERATOR SET SHALL OPERATE AS DICTATED BY THE CONTROL SYSTEM IN ISOCHRONOUS, SYNCHRONIZE, LOAD SHARE, LOAD DEMAND, OR LOAD GOVERN STATE.
WHEN ALL START SIGNALS HAVE BEEN REMOVED FROM THE GENERATOR SET, IT SHALL COMPLETE A TIME DELAY STOP SEQUENCE. THE DURATION OF THE TIME DELAY STOP PERIOD SHALL BE ADJUSTABLE BY THE OPERATOR.
UPON COMPLETION OF THE TIME DELAY STOP PERIOD, THE GENERATOR SET CONTROL SHALL SWITCH OFF THE EXCITATION SYSTEM AND SHALL SHUT DOWN.
ANY START SIGNAL RECEIVED AFTER THE TIME STOP SEQUENCE HAS BEGUN SHALL IMMEDIATELY TERMINATE THE STOPPING SEQUENCE AND RETURN THE GENERATOR SET TO ISOCHRONOUS OPERATION.

THE GENERATOR SET AND ASSOCIATED EQUIPMENT SHALL BE WARRANTED FOR A PERIOD OF NOT LESS THAN 5 YEARS FROM THE DATE OF COMMISSIONING AGAINST DEFECTS IN MATERIALS AND WORKMANSHIP. THE WARRANTY SHALL BE COMPREHENSIVE. NO DEDUCTIBLES SHALL BE ALLOWED FOR TRAVEL TIME, SERVICE HOURS, REPAIR PARTS COST, ETC. GENERATOR UNIT SHALL MEET THE REQUIREMENTS OF ISO 9001 AND U.L. 2200.

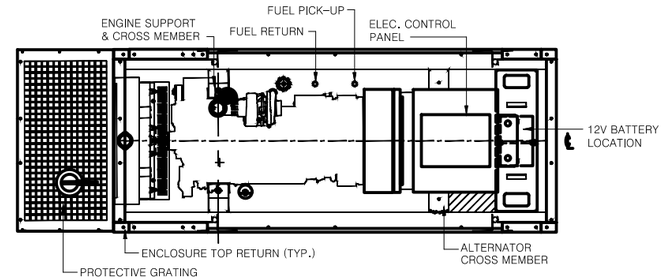

PLAN VIEW WITHOUT ROOF

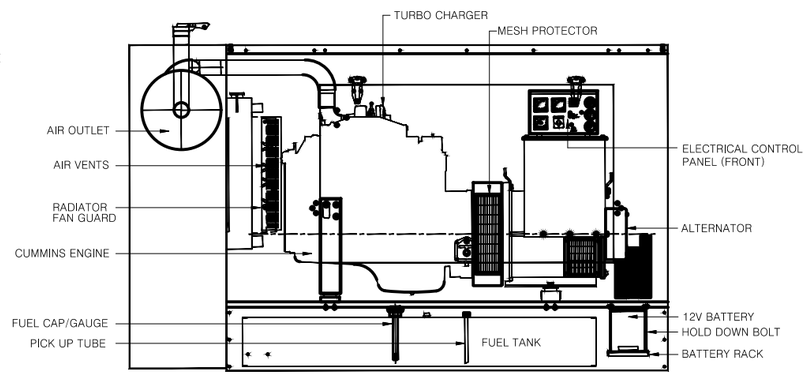

LEFT SIDE VIEW

THE ENCLOSURE, GENERATOR AND BASE MOUNTED FUEL TANK SHALL BE CERTIFIED BY A LICENSED STRUCTURAL PROFESSIONAL ENGINEER LICENSED IN THE STATE OF FLORIDA AND TO BE DESIGN RATED FOR A WIND LOAD RESISTANCE AS REQUIRED BY THE FLORIDA BUILDING CODE. PROVIDE TWO (2) ORIGINALS AND SIX (6) COPIES OF THE P.E. STAMPED CERTIFIED WIND LOAD CALCULATIONS REPORT INDICATING COMPLIANCE TO THE OWNER'S REPRESENTATIVE. THE ENCLOSURE WIND LOAD RATING SHALL BE INCLUDED ON THE MANUFACTURER'S ENCLOSURE DRAWINGS.

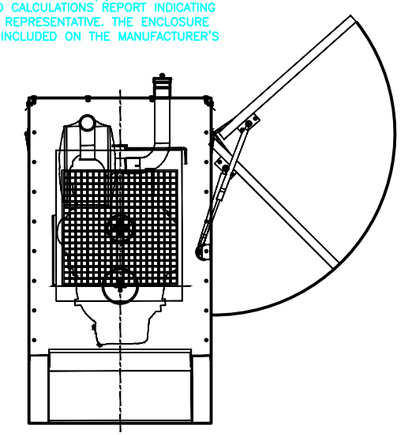

FRONT VIEW

SIZING OF THE GENERATOR SHALL BE SIGNED AND SEALED BY AN ELECTRICAL ENGINEER.

DIESEL STORAGE SYSTEM

PROVIDE A DIESEL STORAGE AND SUPPLY SYSTEM FOR THE ENGINE GENERATOR CONFIGURED AS SHOWN. THE SYSTEM SHALL MEET THE REQUIREMENTS OF THE DIESEL FUEL CODE, THE APPLICABLE PROVISIONS OF FLORIDA STATUTES, CHAPTER 206.874, AND FLORIDA ADMINISTRATIVE CODE, CHAPTER SF–2.001 DIESEL. FUEL TANK TO BE SIZED FOR 500 GALLONS AND SHALL MEET REQUIREMENTS FOR A COMPLETE INSTALLATION AS PER STATE AND LOCAL REQUIREMENTS.

THE GENERATOR SET AND ENCLOSURE SHALL BE MOUNTED AND SHIPPED TO THE JOBSITE ON THE FORMED STEEL SUB–BASE PROVIDED BY THE GENERATOR SUPPLIER. PROVISIONS FOR CRANE UNLOADING OF THE COMPLETE PACKAGE SHALL BE DESIGNED INTO THE BASE OF THE UNIT. NEOPRENE PADS SHALL BE INSTALLED BETWEEN THE FUEL TANK AND THE CONCRETE SLAB. A 500 GALLON BASE MOUNTED FUEL TANK SHALL BE ATTACHED TO THE CONCRETE SLAB WITH STAINLESS STEEL EXPANSION ANCHORS. THE BASE AND ENCLOSURE ASSEMBLY SHALL ALLOW ROOM WITHIN THE PACKAGE TO MOUNT AND MAINTAIN THE SPECIFIED BATTERY CHARGER, ENGINE STARTING BATTERIES, RACKS, AND CABLES, MAIN LINE CIRCUIT BREAKER, AND ENGINE–GENERATOR CONTROL PANEL, AND OTHER ITEMS AS SPECIFIED OR AS SHOWN ON THE DRAWINGS. THE WEIGHT OF THE ENTIRE UNIT CONSISTING OF GENERATOR SET, BASE, ENCLOSURE, AND ALL OTHER SPECIFIED ITEMS INCLUDING ALL LIQUIDS (I.E., FUEL OIL, LUBE OIL, AND COOLING WATER SHALL BE CALCULATED BY THE MANUFACTURER. THE BASE OF THE UNIT SHALL BE DESIGNED AND MANUFACTURED AS A HEAVY DUTY, FORMED STEEL CONSTRUCTION WITH FOUR (4)POINT LIFTING PROVISION TO SUPPORT THE CALCULATED WEIGHT. DETAILS AND MANUFACTURER'S CERTIFICATION OF THE BASE CONSTRUCTION SHALL BE INCLUDED WITH THE DRAWINGS SUBMITTED FOR APPROVAL AS WELL AS ALL WEIGHT CALCULATIONS. THE UNIT SHALL BE EQUIPPED WITH A DOUBLE WALL IN–BASE UL142 FUEL TANK AND SHALL BE SUPPLIED WITH A LOCKABLE, EXTERIOR LOCATED FILL CAP. ALL NECESSARY FUEL AND VENT LINES WITH VENT CAPS FOR PROPER ENGINE PERFORMANCE SHALL BE PROVIDED AS WELL AS A MEANS TO READILY DETECT THE FUEL LEVEL IN THE TANK WITHOUT THE USE OF A MEASURING STICK. THE FUEL TANK BASE MAXIMUM LENGTH & WIDTH DIMENSIONS SHALL BE AS NOTED ON THE DRAWINGS AND BE FORMED FROM STEEL OF A MINIMUM METAL THICKNESS OF 0.25–INCH (1/4–INCH) AND SHALL BE FITTED WITH LOW FUEL LEVEL INNER WALL LEAK ALARM CONTACT FOR LOCAL AND REMOTE ANNUNCIATION. THE FUEL TANK HEIGHT SHALL NOT EXCEED 24 INCHES.

AUTOMATIC TRANSFER SWITCH

PROVIDE AN AUTOMATIC TRANSFER SWITCH (ATS) AS SHOWN. THE ATS SHALL BE RATED TO CARRY 100 PERCENT OF RATED CURRENT CONTINUOUSLY IN THE ENCLOSURE SUPPLIED, IN AMBIENT TEMPERATURES OF 40 TO +60 DEGREES C, RELATIVE HUMIDITY UP TO 95% (NON CONDENSING), AND ALTITUDES UP TO 1,000 FEET. TRANSFER SWITCH EQUIPMENT SHALL HAVE FAULT CURRENT RATINGS SUITABLE FOR USE IN THE APPLICATION, AS INDICATED BY THE AVAILABLE FAULT CURRENT AT THE SITE AS PER THE ELECTRIC UTILITY.THE ATS SHALL BE A CUMMINS–ONAN 3–POLE OR APPROVED EQUAL.

THE ATS SHALL BE DOUBLE THROW, ELECTRICALLY AND MECHANICALLY INTERLOCKED, AND MECHANICALLY HELD IN THE SOURCE 1 AND SOURCE 2 POSITIONS. THE TRANSFER SWITCH SHALL BE SPECIFICALLY DESIGNED TO TRANSFER TO THE BEST AVAILABLE SOURCE IF IT INADVERTENTLY STOPS IN A NEUTRAL POSITION. THE ATS SHALL BE ELECTRICALLY INTERLOCKED IN BOTH AUTOMATIC AND MANUAL OPERATION MODES TO PERFORM THE OPERATION SEQUENCE SPECIFIED. THE POWER TRANSFER MECHANISM SHALL INCLUDE PROVISIONS FOR MANUAL OPERATION UNDER LOAD WITH THE DOOR OF THE CABINET CLOSED. ALL WIRING SHALL BE TAGGED TO MATCH THE SCHEMATIC, SHALL BE UL LISTED 105 DEGREE C, 600 VOLT RATED, AND SIZED AS REQUIRED. CIRCUIT BOARDS SHALL BE CONNECTED WIRING HARNESSES BY MEANS OF LOCKING DISCONNECT PLUG(S). THE 3–POLE ATS SHALL BE PROVIDED WITH A NEUTRAL BUS AND LUGS SIZED TO CARRY 100% OF THE ATS CURRENT RATING. FIELD CONTROL CONNECTIONS SHALL BE MADE ON A COMMON TERMINAL BLOCK THAT IS CLEARLY AND PERMANENTLY LABELED.

THE ATS SHALL INCORPORATE ADJUSTABLE TIME DELAYS FOR GENERATOR SET START (ADJUSTABLE IN A RANGE FROM 0–15 SECONDS); TRANSFER (ADJUSTABLE IN A RANGE FROM 0–120 SECONDS); RETRANSFER (ADJUSTABLE IN A RANGE FROM 0–30 MINUTES); AND GENERATOR STOP (COOLDOWN; ADJUSTABLE IN A RANGE OF 0–30 MINUTES), AND SHALL BE CONFIGURABLE TO CONTROL THE OPERATION TIME FROM SOURCE TO SOURCE (PROGRAM TRANSITION OPERATION) IN OPEN TRANSITION MODE. THE CONTROL SYSTEM SHALL BE CAPABLE OF ENABLING OR DISABLING THIS FEATURE, AND ADJUSTING THE TIME PERIOD TO A SPECIFIC VALUE. A PHASE BAND MONITOR OR SIMILAR DEVICE IS NOT AN ACCEPTABLE ALTERNATE FOR THIS FEATURE.

THE ATS SHALL PROVIDE AN ISOLATED NORMALLY HELD OPEN, AND CLOSE TO START RELAY CONTACT FOR STARTING OF THE ENGINE–GENERATOR SET. OUTPUT CONTACTS SHALL BE FORM C, FOR COMPATIBILITY. THE ATS SHALL PROVIDE RELAY CONTACTS TO INDICATE THE FOLLOWING CONDITIONS: SOURCE 1 AVAILABLE, LOAD CONNECTED TO SOURCE 1, SOURCE 2 AVAILABLE, SOURCE 2 CONNECTED TO LOAD.

THE ATS ENCLOSURE SHALL BE NEMA 4X 304 STAINLESS STEEL (OR BETTER), UL LISTED AND SHALL PROVIDE NEC REQUIRED WIRE BEND SPACE. THE CABINET DOOR SHALL BE KEY LOCKING. SEPARATE ENCLOSURES SHALL BE THE NEMA TYPE SPECIFIED. MANUAL OPERATING HANDLES AND ALL CONTROL SWITCHES (OTHER THAN KEY OPERATED SWITCHES) SHALL BE ACCESSIBLE TO AUTHORIZED PERSONNEL ONLY BY OPENING THE KEY LOCKING CABINET DOOR.

FACTORY TESTING: THE TRANSFER SWITCH SUPPLIER SHALL PERFORM A COMPLETE OPERATIONAL TEST ON THE TRANSFER SWITCH PRIOR TO SHIPPING FROM THE FACTORY. A CERTIFIED TEST REPORT SHALL BE AVAILABLE ON REQUEST. TEST PROCESS SHALL INCLUDE CALIBRATION OF VOLTAGE SENSORS.

AFTER INSTALLATION, THE SUPPLIER SHALL CONDUCT A COMPLETE OPERATION, BASIC MAINTENANCE, AND EMERGENCY SERVICE SEMINAR FOR UP TO 10 PERSONS EMPLOYED BY THE CITY. THE SEMINAR SHALL INCLUDE INSTRUCTION ON OPERATION OF THE TRANSFER EQUIPMENT, NORMAL TESTING AND EXERCISE, ADJUSTMENTS TO THE CONTROL SYSTEM AND EMERGENCY OPERATION PROCEDURES. THE CLASS DURATION SHALL BE AT LEAST 4 HOURS IN LENGTH, AND INCLUDE PRACTICAL OPERATION WITH THE INSTALLED EQUIPMENT.

REINFORCED CONCRETE EQUIPMENT PADS

PROVIDE BUILT–UP PAD AREA FOR NEW CONCRETE FOUNDATIONS TO ELEVATIONS AS SHOWN. USE CLEAN GRANULAR FILL IN 6–INCH LIFTS. GRANULAR FILL SHALL BE CLEAN SAND WITH NO MORE THAN 10% FINES PASSING THROUGH A NO.200 SIEVE. COMPACT TO 95% RELATIVE COMPACTION PER ASTM D1557. PROVIDE TEST REPORT FROM INDEPENDENT TEST LAB SATISFACTORY TO OWNER AND ENGINEER.

COORDINATE FORM PLACEMENT WITH PIPING AND ELECTRICAL CONDUITS AS SHOWN IN THESE DRAWINGS. FORMWORK FOR SLAB SHALL BE IN ACCORDANCE WITH ACI 347, FOR PLACEMENT OF CONCRETE IN ACCORDANCE WITH ACI 304R.

REINFORCING STEEL SHALL BE DEFORMED BARS IN ACCORDANCE WITH ASTM A615, GRADE 60, PLACED ON SUPPORTS IN ACCORDANCE WITH THE CRSI MANUAL OF STANDARD PRACTICE.

CONCRETE MIX SHALL UTILIZE TYPE II PORTLAND CEMENT WITH NATURAL AGGREGATE MEETING ASTM C150 AND ASTM C33 REQUIREMENTS RESPECTIVELY. THE MINIMUM 28–DAY STRENGTH SHALL BE 4,000 PSI. TAKE SAMPLES DURING POUR AND PROVIDE TEST CYLINDER BREAK REPORT FROM INDEPENDENT TEST LAB.

PLACE CONTROL JOINTS AS SHOWN. ROUND OFF ALL TOP EXPOSED EDGES WITH 0.25–INCH RADIUS EDGING TOOL.

PROTECT SURFACES AND WET CURE CONCRETE FOR A MINIMUM OF 7 DAYS AFTER PLACEMENT.

THE CONCRETE SUPPORT PAD FINISHED GRADE SHALL BE 18" ABOVE BASE FLOOD ELEVATION. FUEL TANK VENTS SHALL BE PROTECTED FROM FLOODING.

PREV

RETURN TO TOC

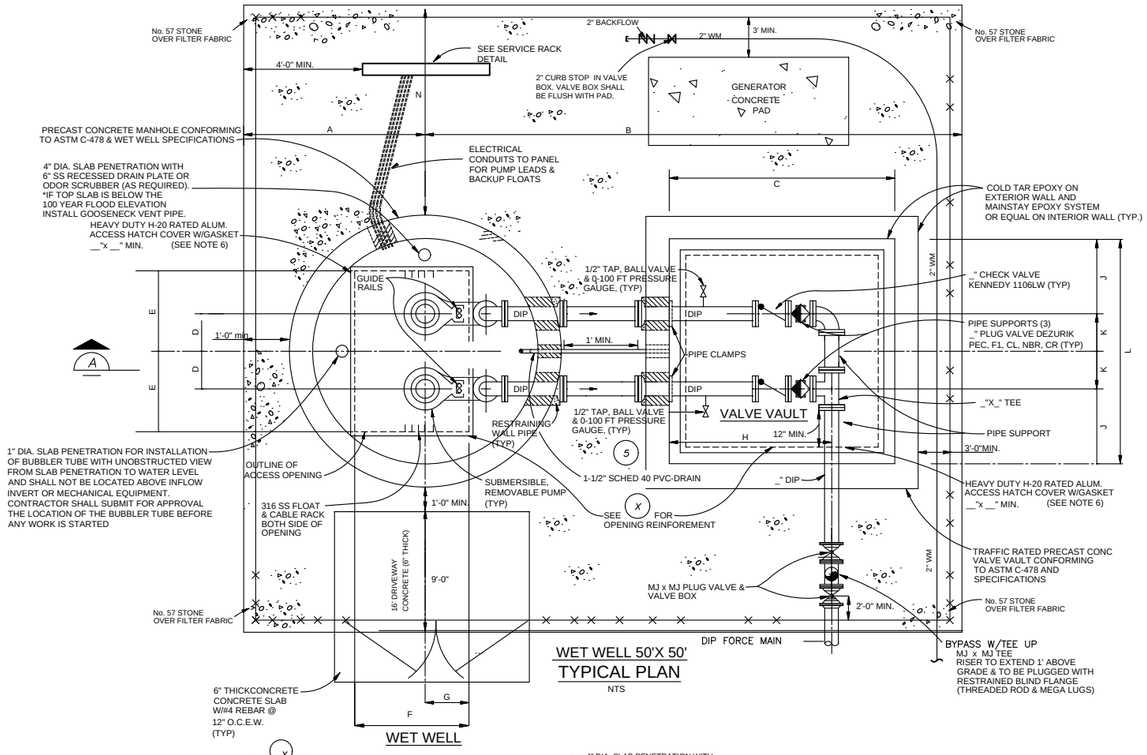

WET WELL 50'X 50'
TYPICAL PLAN
NTS

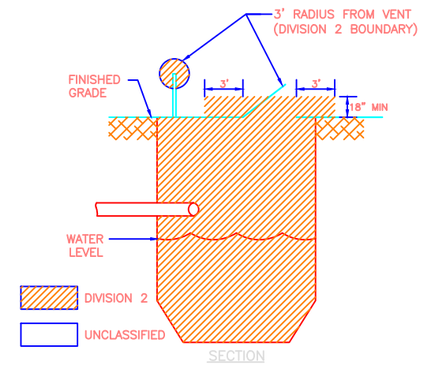

NFPA BOUNDARY CLASSIFICATION
N.T.S.

NOTES:

1. THE AREA INSIDE THE WET WELL IS A HAZARDOUS, CLASS 1, DIV. 2 LOCATION.
2. THE AREA WITHIN 3 FEET FROM THIS HATCH AND 1.5 FEET ABOVE THE WET WELL SLAB IS A HAZARDOUS, CLASS 1, DIV. 2 LOCATION.
3. THE AREA WITHIN A 3 FOOT RADIUS FROM THE VENT OPENING IS A HAZARDOUS, CLASS 1, DIV. 2 LOCATION. THE AREA WITHIN A 5 FOOT RADIUS FROM THE VENT OPENING IS A HAZARDOUS, CLASS 1, DIV. 2 LOCATION.
4. THE AREA INSIDE THE VALVE VAULT IS A HAZARDOUS, CLASS 1, DIV. 2 LOCATION.
5. PROVIDE WIRING METHODS AND MATERIALS SUITABLE FOR A CLASS 1, DIVISION 2 AREA WITHIN ALL HAZARDOUS AREAS. USE CROUSE-HINDS MODEL EYSR RETROFIT SEALING FITTING.
6. THE CONSULTING ENGINEER MUST SPECIFY IF THE STATION IS FOR A 'RESIDENTIAL' OR 'SANITARY OR COMBINED' SEWER SERVICE.

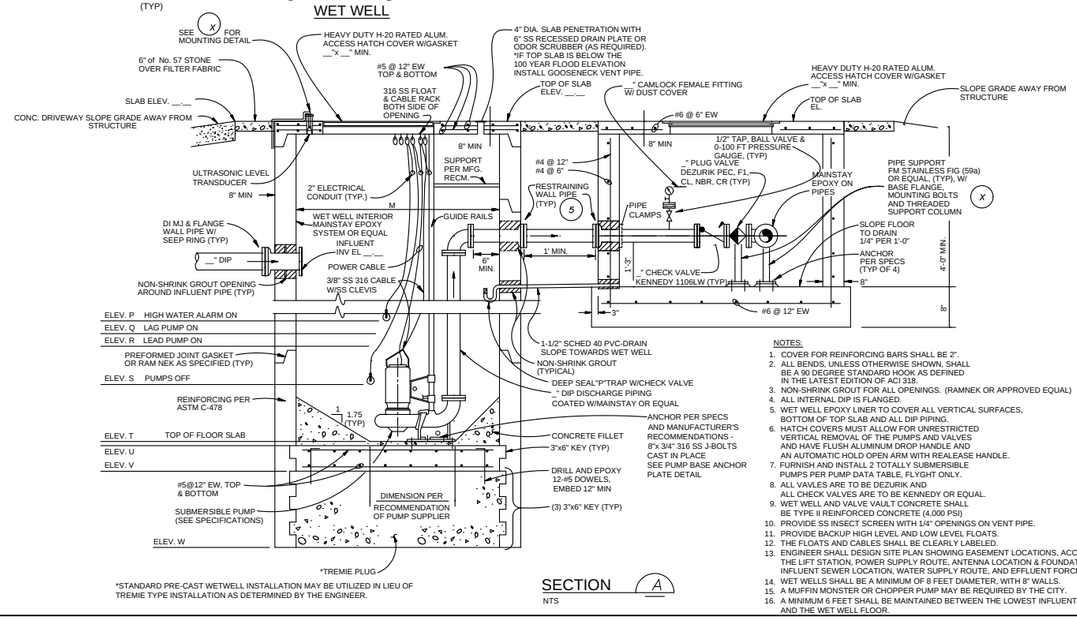

*STANDARD PRE-CAST WETWELL INSTALLATION MAY BE UTILIZED IN LIEU OF TREMIE TYPE INSTALLATION AS DETERMINED BY THE ENGINEER.

SECTION A
NTS

NOTES:

1. COVER FOR REINFORCING BARS SHALL BE 2".
2. ALL BENDS, UNLESS OTHERWISE SHOWN, SHALL BE A 90 DEGREE STANDARD HOOK AS DEFINED IN THE LATEST EDITION OF ACI 318.
3. NON-SHRINK GROUT FOR ALL OPENINGS. (RAMNEK OR APPROVED EQUAL)
4. ALL INTERNAL DIP IS FLANGED.
5. WET WELL EPOXY LINER TO COVER ALL VERTICAL SURFACES, BOTTOM OF TOP SLAB AND ALL DIP PIPING.
6. HATCH COVERS MUST ALLOW FOR UNRESTRICTED VERTICAL REMOVAL OF THE PUMPS AND VALVES AND HAVE FLUSH ALUMINUM DROP HANDLE AND AN AUTOMATIC HOLD OPEN ARM WITH REALEASE HANDLE.
7. FURNISH AND INSTALL 2 TOTALLY SUBMERSIBLE PUMPS PER PUMP DATA TABLE, FLYGHT ONLY.
8. ALL VAVLES ARE TO BE DEZURIK AND ALL CHECK VALVES ARE TO BE KENNEDY OR EQUAL.
9. WET WELL AND VALVE VAULT CONCRETE SHALL BE TYPE II REINFORCED CONCRETE (4,000 PSI)
10. PROVIDE SS INSECT SCREEN WITH 1/4" OPENINGS ON VENT PIPE.
11. PROVIDE BACKUP HIGH LEVEL AND LOW LEVEL FLOATS.
12. THE FLOATS AND CABLES SHALL BE CLEARLY LABELED.
13. ENGINEER SHALL DESIGN SITE PLAN SHOWING EASEMENT LOCATIONS, ACCESS TO THE LIFT STATION, POWER SUPPLY ROUTE, ANTENNA LOCATION & FOUNDATION, THE INFLUENT SEWER LOCATION, WATER SUPPLY ROUTE, AND EFFLUENT FORCE MAIN ROUTE.
14. WET WELLS SHALL BE A MINIMUM OF 8 FEET DIAMETER, WITH 8" WALLS.
15. A MUFFIN MONSTER OR CHOPPER PUMP MAY BE REQUIRED BY THE CITY.
16. A MINIMUM 6 FEET SHALL BE MAINTAINED BETWEEN THE LOWEST INFLUENT INVERT AND THE WET WELL FLOOR.

LIFT STATION DATA

DIMENSIONS	DESIGN	ASBUILT
DIM. A		
DIM. B		
DIM. C		
DIM. D		
DIM. E		
DIM. F		
DIM. G		
DIM. H		
DIM. J		
DIM. K		
DIM. L		
DIM. M		
DIM. N		

ELEVATION	DESIGN	ASBUILT
ELEV. P		
ELEV. Q		
ELEV. R		
ELEV. S		
ELEV. T		
ELEV. U		
ELEV. V		
ELEV. W		

ALL ITEMS MUST BE FILLED IN.

PUMP DATA

MANUFACTURER:	MODEL:
IMPELLER NO.:	NOMINAL SIZE: IN.
SPEED: RPM	DISCHARGE SIZE: IN.
VOLTAGE: v. 60 Hz.	PHASE: 3
HORSEPOWER: hp.	MIN. SOLID SIZE: IN.
OPERATING CONDITIONS SHALL BE _____ GPM, _____ FT. TDH, MIN. SHUT OFF HEAD _____ FT.	

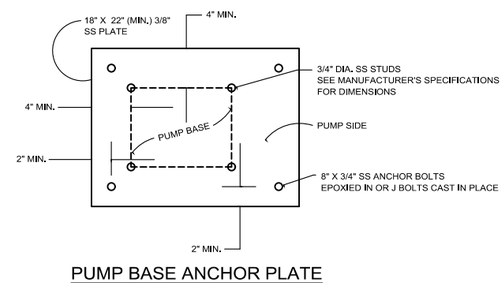

PUMP BASE ANCHOR PLATE
NTS

NEXT

RETURN TO TOC

THE CITY OF DAYTONA BEACH
UTILITIES DEPARTMENT

THIS SHEET SHOWS THE MINIMUM INFORMATION AND THE BASIC OUTLINE OF FACILITIES REQUIRED. THIS DRAWING IS PROVIDED FOR INFORMATIONAL PURPOSES ONLY. A PROFESSIONAL ENGINEER SHALL BE REQUIRED TO CERTIFY ALL DETAILS.

SUBMERSIBLE RESIDENTIAL SEWER
LIFT STATION
STANDARD
DETAIL
S-26 (Sheet 1 of 8)

FY: 15/16	
Drawing Date: 01/16/13	
Drawn By: JMP	
Checked By: AMS	
Scale: NTS	
Revision Date: 6-2016	
File Name: S-26 1 of 8	
Page 113	

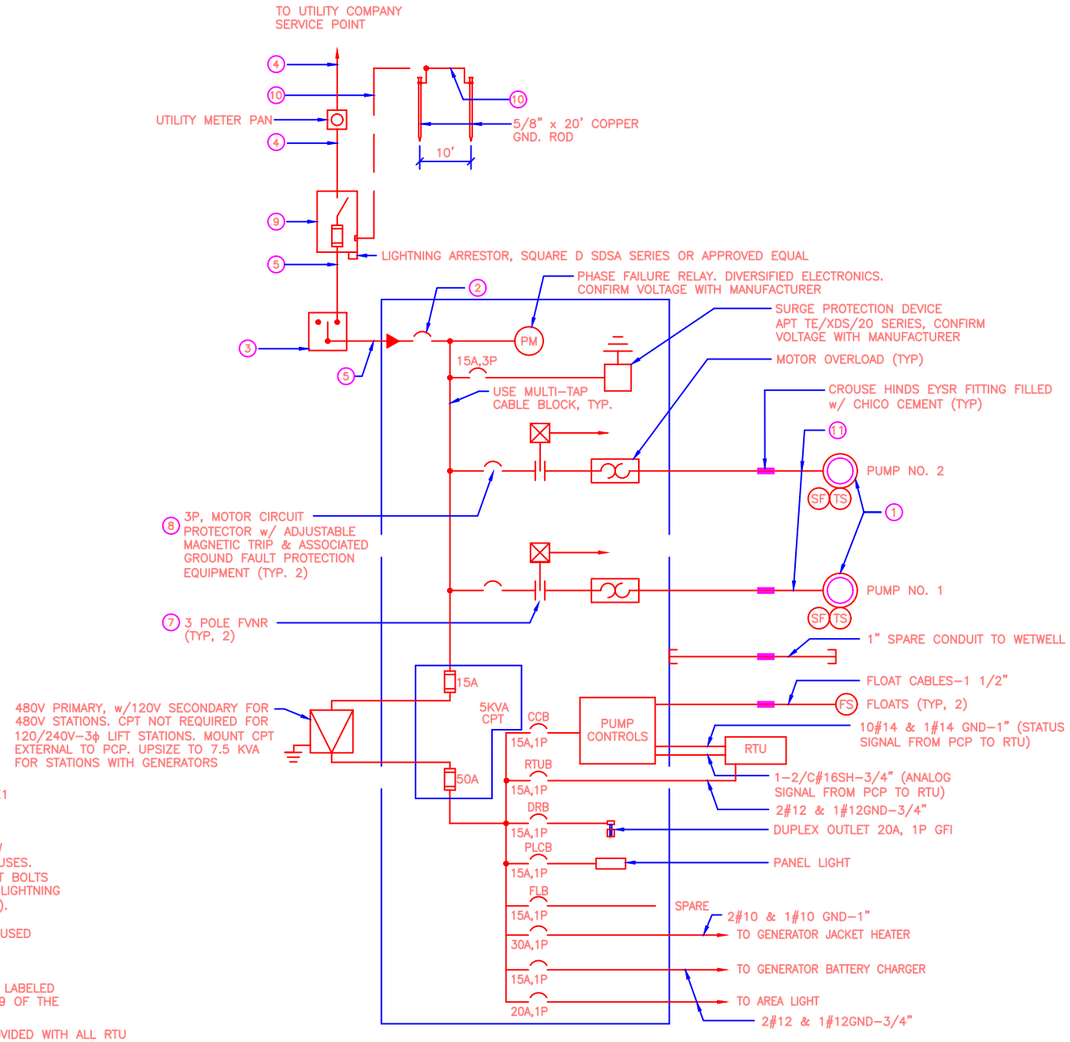

PUMP CONTROL PANEL (PCP) SINGLE LINE DIAGRAM

NOTES:

1. FUSES SHALL BE BUSSMAN CLASS RK1 CURRENT LIMITING.
2. NEMA 4X 304 SS FUSED SWITCH AND ASSOCIATED REJECTION CLIPS AND 4W NEUTRAL KIT w/ CURRENT LIMITING FUSES. SWITCH SHALL BE EQUIPPED w/ SPLIT BOLTS ON LOAD SIDE FOR INSTALLATION OF LIGHTNING ARRESTOR (SERVICE ENTRANCE RATED).
3. B PHASE (HIGH LEG) SHALL NOT BE USED FOR SINGLE PHASE CIRCUITS ON ALL 120/240V-3ϕ OPEN DELTA SERVICES.
4. ALL CONTROL PANELS SHALL BE U.L. LABELED AND SHALL COMPLY WITH ARTICLE 409 OF THE N.E.C.
5. AN ESSEX PHONE LINE MUST BE PROVIDED WITH ALL RTU FROM AT&T. ALSO MUST COORDINATE WITH THE CITY'S IT DEPARTMENT ABOUT PHONE INFORMATION.

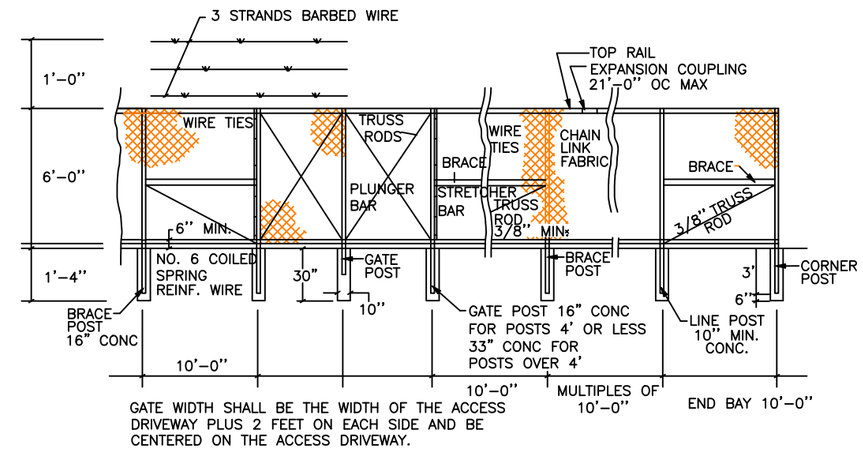

FENCE DETAIL

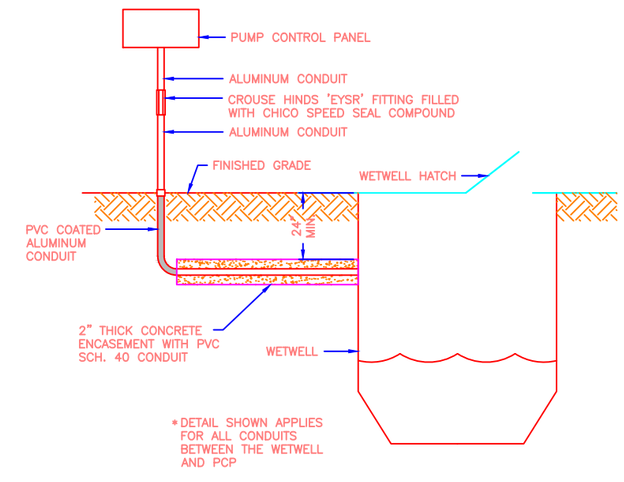

CONDUIT INSTALLATION DETAIL

① PROPOSED VOLTAGE	② PROPOSED MOTOR SIZE (HP)	③ PANEL MAIN BKR.	④ ATS OR MTS	⑤ SERVICE CONDUIT & CONDUCTORS	⑥ LOAD CONDUIT & CONDUCTORS	⑥ EMERGENCY CONDUCTORS	⑦ STARTER SIZE	⑧ MOTOR BREAKER	⑨ FUSED DISC/FUSES (SEE NOTES)	⑩ GROUND	⑪ PUMP CABLE CONDUIT SIZE
480V, 3ø, 3W	X ≥ 25 HP	200A,3P	200A,3P	4#3/0-2 1/2"	3#3/0 & 1#4GND-2 1/2"	3#3/0 & 1#6GND	3	125A,3P	200A,3P/200A	#2	PER N.E.C.
480V, 3ø, 3W	10HP ≤ X < 25 HP	200A,3P	200A,3P	4#3/0-2 1/2"	3#3/0 & 1#4GND-2 1/2"	3#3/0 & 1#6GND	2	70A,3P	200A,3P/200A	#2	PER N.E.C.
480V, 3ø, 3W	X < 10 HP	200A,3P	200A,3P	4#3/0-2 1/2"	3#3/0 & 1#4GND-2 1/2"	3#3/0 & 1#6GND	1	30A,3P	200A,3P/200A	#2	PER N.E.C.
240V, 3ø, 3W	15HP ≤ X ≤ 20 HP	200A,3P	200A,3P	4#3/0-2 1/2"	3#3/0 & 1#4GND-2 1/2"	3#3/0 & 1#4GND	3	125A,3P	200A,3P/200A	#2	PER N.E.C.
240V, 3ø, 3W	7.5HP ≤ X < 15 HP	100A,3P	100A,3P	4#2-1 1/2"	3#2 & 1#6GND-1 1/2"	3#2 & 1#6GND	2	80A,3P	100A,3P/100A	#6	PER N.E.C.
240V, 3ø, 3W	X < 7.5 HP	100A,3P	100A,3P	4#2-1 1/2"	3#2 & 1#6GND-1 1/2"	3#2 & 1#6GND	1	50A,3P	100A,3P/100A	#6	PER N.E.C.

NOTE: SOLID STATE SOFT STARTERS SHALL BE PROVIDED FOR MOTOR SIZES ABOVE 50 HP.

NEXT PREV RETURN TO TOC

THE CITY OF DAYTONA BEACH
UTILITIES DEPARTMENT

THIS SHEET SHOWS THE MINIMUM INFORMATION AND THE BASIC OUTLINE OF FACILITIES REQUIRED. THIS DRAWING IS PROVIDED FOR INFORMATIONAL PURPOSES ONLY. A PROFESSIONAL ENGINEER SHALL BE REQUIRED TO CERTIFY ALL DETAILS.

SUBMERSIBLE RESIDENTIAL SEWER
LIFT STATION
STANDARD
DETAIL
S-26 (Sheet 2 of 8)

FY: 15/16
Drawing Date: 01/16/13
Drawn By: RRM
Checked By: SEB
Scale: NTS
Revision Date: -
File Name: S-26 2 of 8

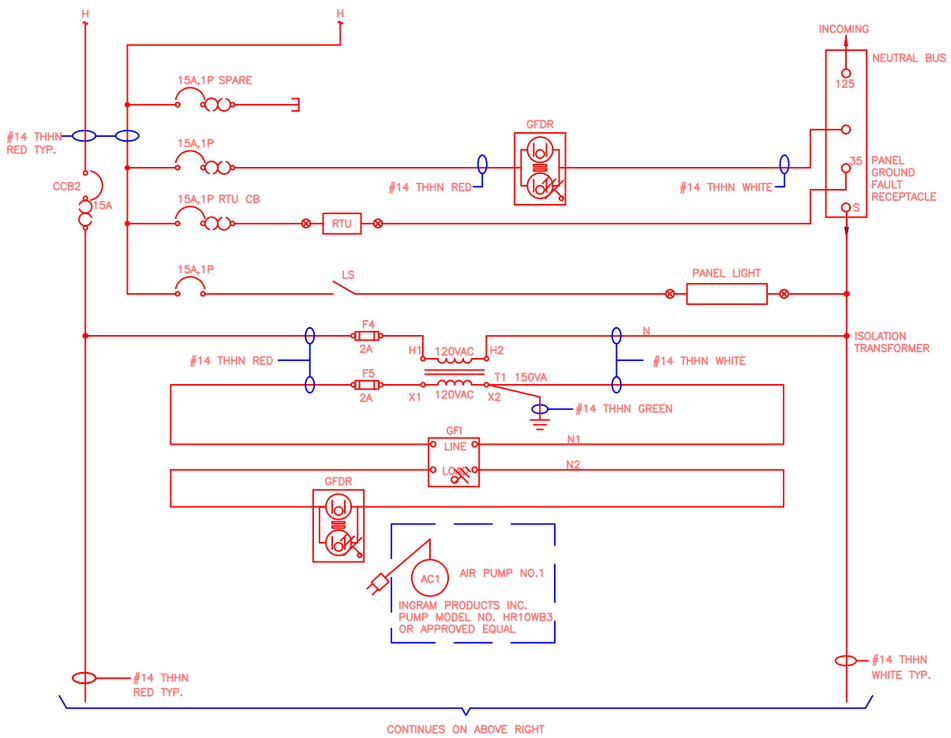

PCP ELEMENTARY DIAGRAM

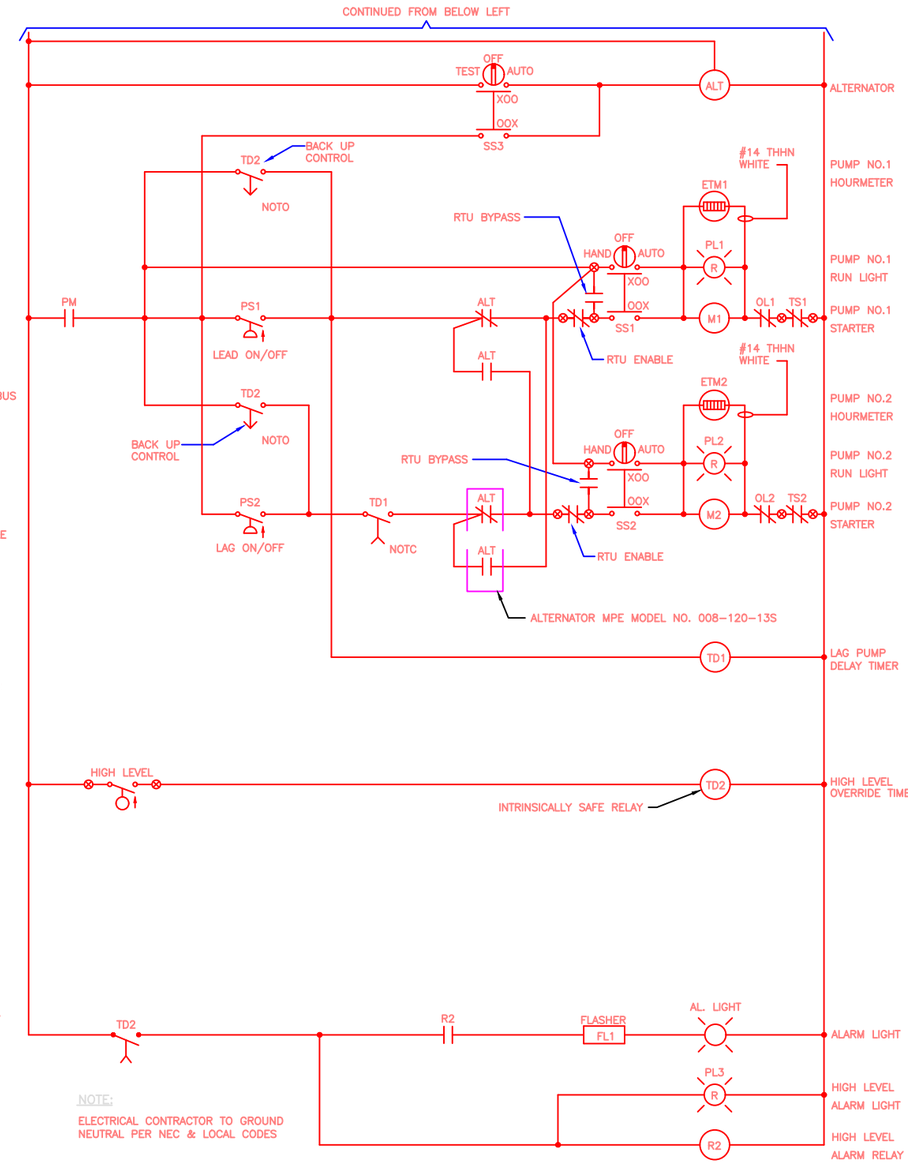

PCP ELEMENTARY DIAGRAM (CONTINUED)

CONTROL PANEL ABBREVIATIONS

A	AMPS
AC	AIR COMPRESSOR
ACR	AIR COMPRESSOR RECEPTACLE
AH	ALARM HORN
AL	ALARM LIGHT
ALT	ALTERNATOR
AS	ALARM SILENCER
ASB	ALARM SILENCE BUTTON
ATS	ALTERNATOR TEST SWITCH
AV	AIR VENT
C	CONDUIT
CCB	CONTROL CIRCUIT BREAKER
CPT	CONTROL POWER TRANSFORMER
CR	CONTROL RELAY
CT	CONTROL TRANSFORMER
DR	DUPLEX RECEPTACLE
DRB	DUPLEX RECEPTACLE BREAKER
ECB	EMERGENCY CIRCUIT BREAKER
EPR	EMERGENCY POWER RECEPTACLE
ETM	ELAPSED TIME METER
F	FUSE
FB	FEEDER BREAKER (SURGE PROTECTION)
FI	FLOW INDICATOR
FL	FLUORESCENT LIGHT
FLB	FLUORESCENT LIGHT BREAKER
FS	FLOAT SWITCH
FTS	FLOAT TEST SWITCH
GFDR	GROUND FAULT DUPLEX RECEPTACLE
GND	GROUND
GR	GENERATOR RECEPTACLE
HLA	HIGH LEVEL ALARM
HOA	HANDS-OFF-AUTOMATIC SELECTOR
HS	HAND SWITCH
IAS	INTRUDER ALARM SWITCH
LA	LIGHTNING ARRESTOR
LI	WETWELL LEVEL INDICATOR
LR	LEVEL RELAY
LS	LIGHT SWITCH
MCB	MAIN CIRCUIT BREAKER
MCP	MOTOR CIRCUIT PROTECTOR
MS	MOTOR STARTER
N	NEUTRAL
OL	OVERLOAD HEATERS
NOTO	NORMALLY OPEN/TIMED TO OPEN
NOTC	NORMALLY OPEN/TIMED TO CLOSE
PL	LEVEL INDICATORS (PUSH-TO-TEST)
PLCB	PANEL LIGHT CIRCUIT BREAKER
PM	PHASE MONITOR
PS	PRESSURE SWITCH
RL	PUMP RUN INDICATOR
RTU	REMOTE TELEMETRY UNIT
RTUB	REMOTE TELEMETRY UNIT BREAKER
SB	SLOW BLOW FUSE
SC	SURGE CAPACITOR
SF1	SEAL FAIL RELAY
SS	STAINLESS STEEL
T	TERMINAL
TB	COPPER POWER TERMINATION LUGS
TD	TIME DELAY RELAY
TL	TROUBLE LIGHT (40W FLUORESCENT)
TLS	TROUBLE LIGHT SWITCH
TS	TERMINAL STRIP

NOTES

1. LIGHTS SHALL BE "PUSH TO TEST" TYPE.

NEXT PREV

RETURN TO TOC

THE CITY OF DAYTONA BEACH
UTILITIES DEPARTMENT

THIS SHEET SHOWS THE MINIMUM INFORMATION AND THE BASIC OUTLINE OF FACILITIES REQUIRED. THIS DRAWING IS PROVIDED FOR INFORMATIONAL PURPOSES ONLY. A PROFESSIONAL ENGINEER SHALL BE REQUIRED TO CERTIFY ALL DETAILS.

SUBMERSIBLE SANITARY OR COMBINED SEWER
LIFT STATION
CONTROL AND RTU
DIAGRAMS
S-26 (Sheet 3 of 8)

FY-15/16	
Drawing Date:	01/16/13
Drawn By:	RRM
Checked By:	SEB
Scale:	NTS
Revision Date:	
File Name:	S-26 3 of 8
Page 115	

LSPro - Daytona Monitor ONLY

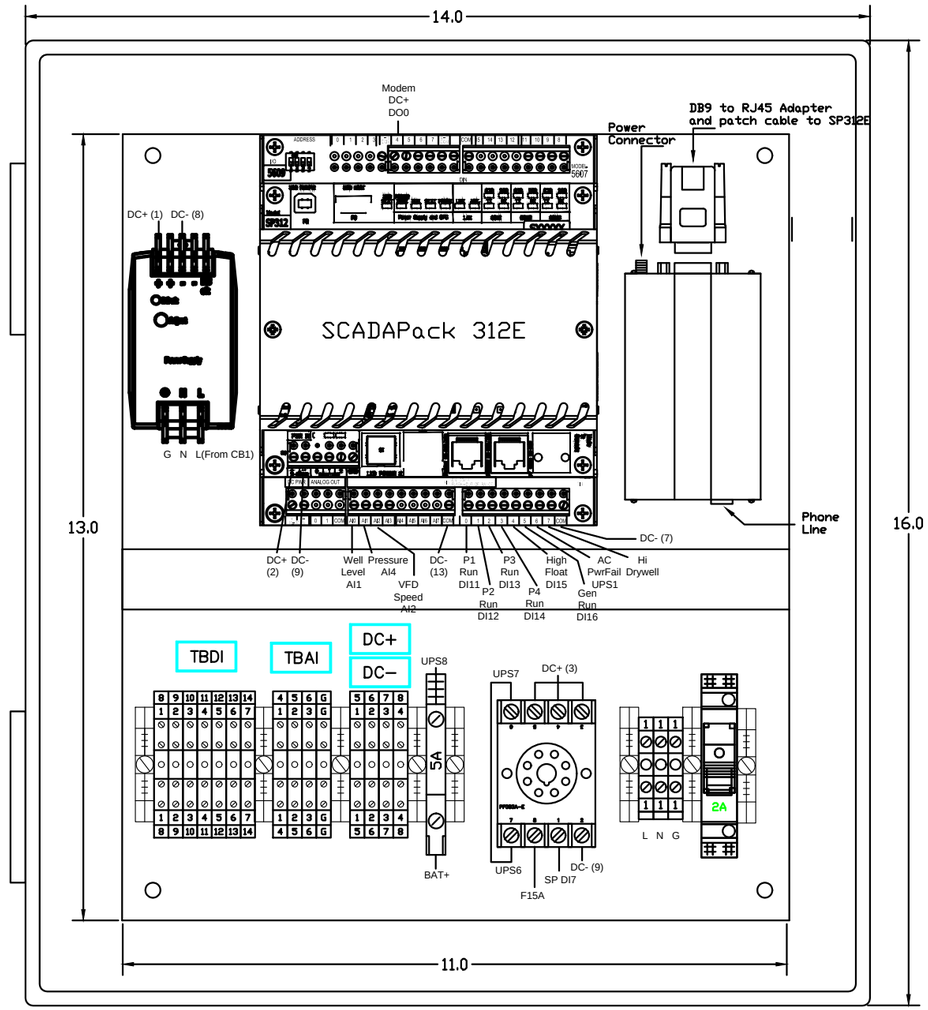

DATE	REVISION	BY	CH'D
5/26/2015	SHOP DRAWINGS	PS	
	Copyright 2016 BCI Technologies All Rights Reserved - LSMonitor		

BCI TECHNOLOGIES

The information, specifications and data contained in this drawing are furnished by and are to remain the property of BCI Technologies. The acceptor warrants that no use will be made of the same except to facilitate the installation, maintenance and operation of the equipment represented by said drawing.

TOLERANCES (UNLESS OTHERWISE SPECIFIED)

CUSTOMER: CITY OF DAYTONA BEACH

TITLE: LIFT STATION RTU w/SP312E

SCALE:	DRAWN BY:	CHECKED BY:	APP'D BY:
N/A	JB		
DATE: 3/21/2014	SHEET 1 OF SHEETS	DRAWING NO. LS-Monitor-PL-001-03 with SP312E	

NEXT PREV

RETURN TO TOC

THE CITY OF DAYTONA BEACH
UTILITIES DEPARTMENT

THIS SHEET SHOWS THE MINIMUM INFORMATION AND THE BASIC OUTLINE OF FACILITIES REQUIRED. THIS DRAWING IS PROVIDED FOR INFORMATIONAL PURPOSES ONLY. A PROFESSIONAL ENGINEER SHALL BE REQUIRED TO CERTIFY ALL DETAILS.

SUBMERSIBLE SANITARY OR COMBINED SEWER
LIFT STATION
RTU W/SP312E
DIAGRAMS
S-26 (Sheet 4 of 8)

FY-15/16	
Drawing Date:	03/14
Drawn By:	KLH
Checked By:	JMP
Scale:	NTS
Revision Date:	
File Name:	S-26 4 of 8
Page 116	

LSPro - Daytona Monitor ONLY

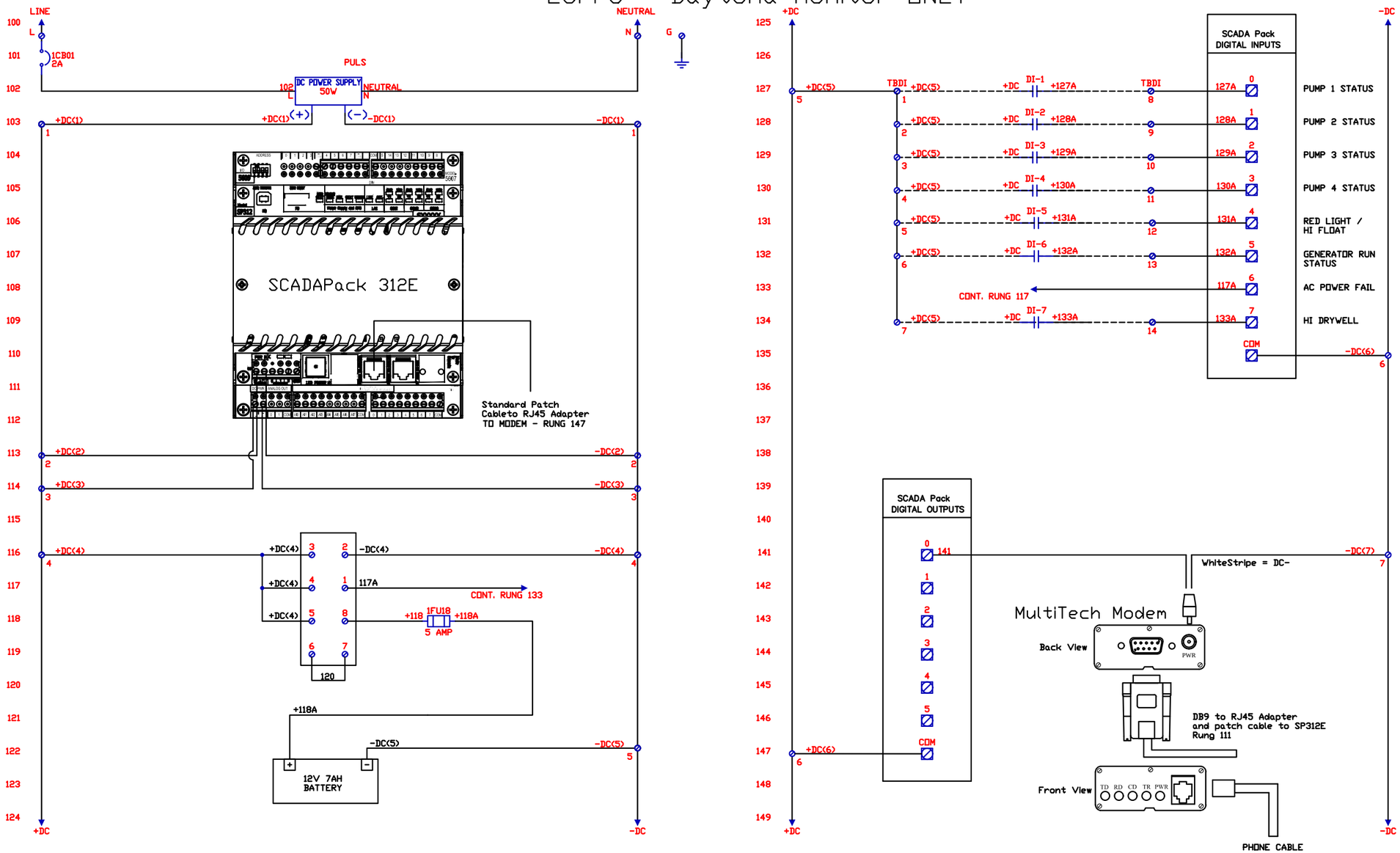

DATE	REVISION	BY	CH'D
5/26/2015	SHOP DRAWINGS	PS	

Copyright 2016 BCI Technologies All Rights Reserved - LSMonitor

BCI TECHNOLOGIES

The information, specifications and data contained in this drawing are furnished by and are to remain the property of BCI Technologies. The acceptor warrants that no use will be made of the same except to facilitate the installation, maintenance and operation of the equipment represented by said drawing.

TOLERANCES (UNLESS OTHERWISE SPECIFIED)

CUSTOMER: CITY OF DAYTONA BEACH

TITLE: LIFT STATION RTU w/SP312E

SCALE	DRAWN BY	CHECKED BY	APP'D BY
N/A	JB		
DATE	SHEET	OF SHEETS	DRAWING NO.
3/21/2014	1		40067-EE-001-01 with SP312E

NEXT PREV

RETURN TO TOC

THE CITY OF DAYTONA BEACH
UTILITIES DEPARTMENT

THIS SHEET SHOWS THE MINIMUM INFORMATION AND THE BASIC OUTLINE OF FACILITIES REQUIRED. THIS DRAWING IS PROVIDED FOR INFORMATIONAL PURPOSES ONLY. A PROFESSIONAL ENGINEER SHALL BE REQUIRED TO CERTIFY ALL DETAILS.

SUBMERSIBLE SANITARY OR COMBINED SEWER
LIFT STATION
RTU W/SP312E
DIAGRAMS
S-26 (Sheet 5 of 8)

FY-15/16
Drawing Date: 03/14
Drawn By: KLH
Checked By: JMP
Scale: NTS
Revision Date:
File Name: S-26 5 of 8

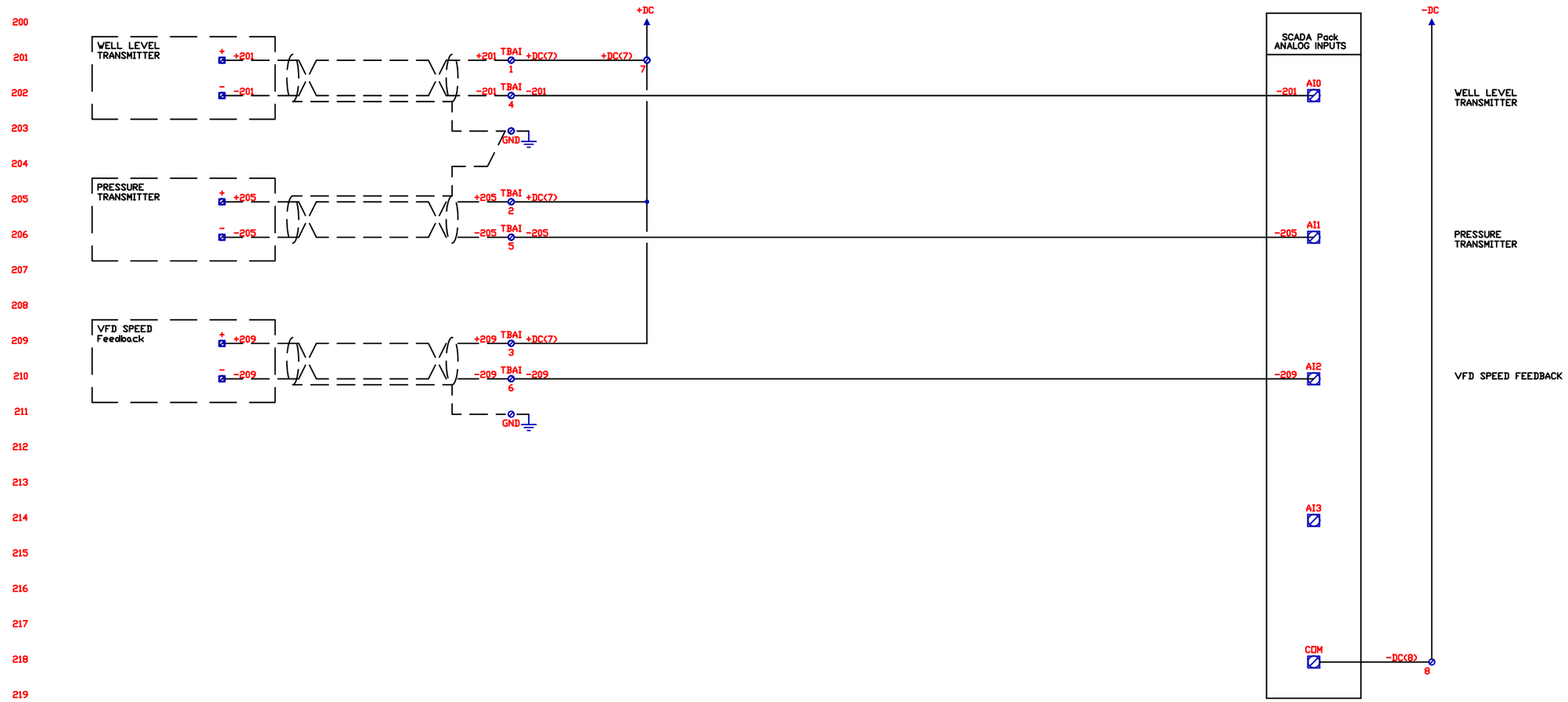

DATE	REVISION	BY	CH'D
3/26/2015	SHOP DRAWINGS	PS	

Copyright 2016 BCI Technologies All Rights Reserved - LSMonitor

BCI TECHNOLOGIES

The information, specifications and data contained in this drawing are furnished by and are to remain the property of BCI Technologies. The acceptor warrants that no use will be made of the same except to facilitate the installation, maintenance and operation of the equipment represented by said drawing.

TOLERANCES (UNLESS OTHERWISE SPECIFIED)

CUSTOMER: CITY OF DAYTONA BEACH

TITLE: LIFT STATION RTU wSP312E

SCALE	DRAWN BY	CHECKED BY	APP'D BY
N/A	JB		
DATE: 3/21/2014	SHEET 2 OF SHEETS 2	DRAWING NO. 40067-EE-002-01 with SP312E	

THE CITY OF DAYTONA BEACH
UTILITIES DEPARTMENT

THIS SHEET SHOWS THE MINIMUM INFORMATION AND THE BASIC OUTLINE OF FACILITIES REQUIRED. THIS DRAWING IS PROVIDED FOR INFORMATIONAL PURPOSES ONLY. A PROFESSIONAL ENGINEER SHALL BE REQUIRED TO CERTIFY ALL DETAILS.

SUBMERSIBLE SANITARY OR COMBINED SEWER
LIFT STATION
RTU W/SP312E
DIAGRAMS
S-26 (Sheet 6 of 8)

FY-15/16
Drawing Date: 03/14
Drawn By: KLH
Checked By: JMP
Scale: NTS
Revision Date:
File Name: S-26 6 of 8

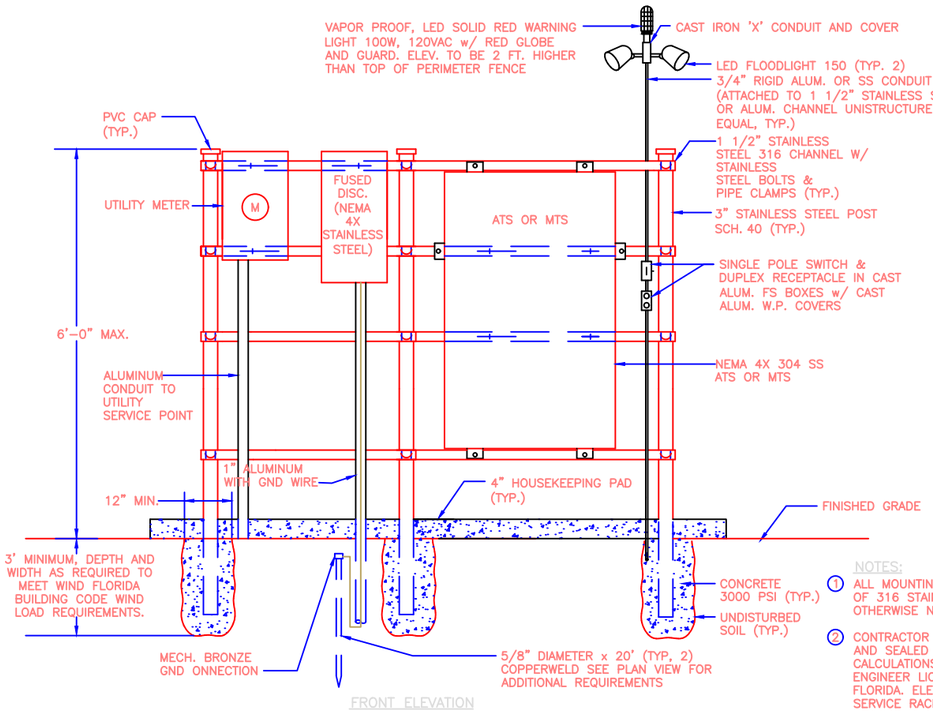

NOTES:

1. ALL MOUNTING HARDWARE SHALL BE OF 316 STAINLESS STEEL, UNLESS OTHERWISE NOTED.
2. CONTRACTOR SHALL SUBMIT SIGNED AND SEALED WIND LOAD CALCULATIONS FROM A STRUCTURAL ENGINEER LICENSED IN THE STATE OF FLORIDA. ELECTRICAL EQUIPMENT SERVICE RACK TO BE CERTIFIED PER FLORIDA BUILDING CODE.
3. ABOVE GRADE ALUMINUM CONDUIT TO BE TRANSITIONED TO PVC SCHEDULE 80 BELOW GRADE FOR NON-SIGNAL CONDUITS.

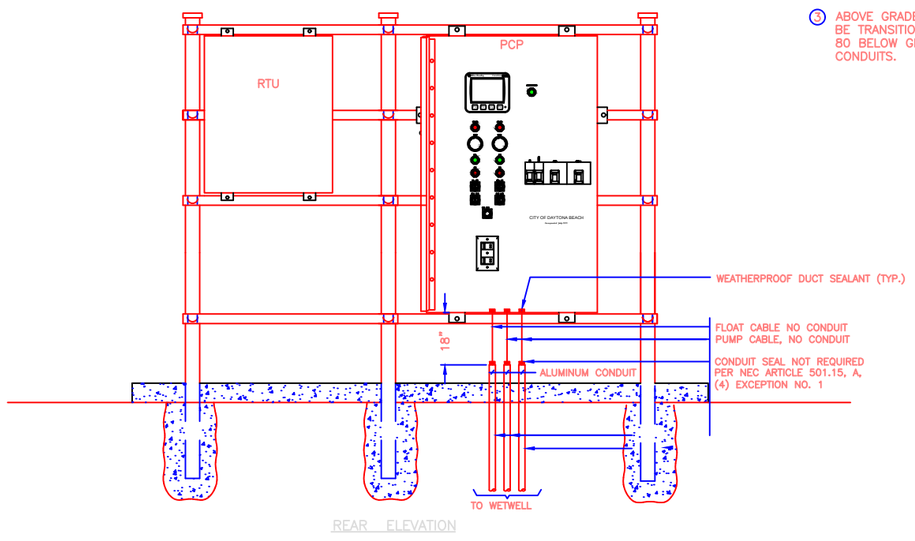

FLOAT CABLE IN CONDUIT
PUMP CABLE IN CONDUIT

SERVICE RACK DETAIL

N.T.S.

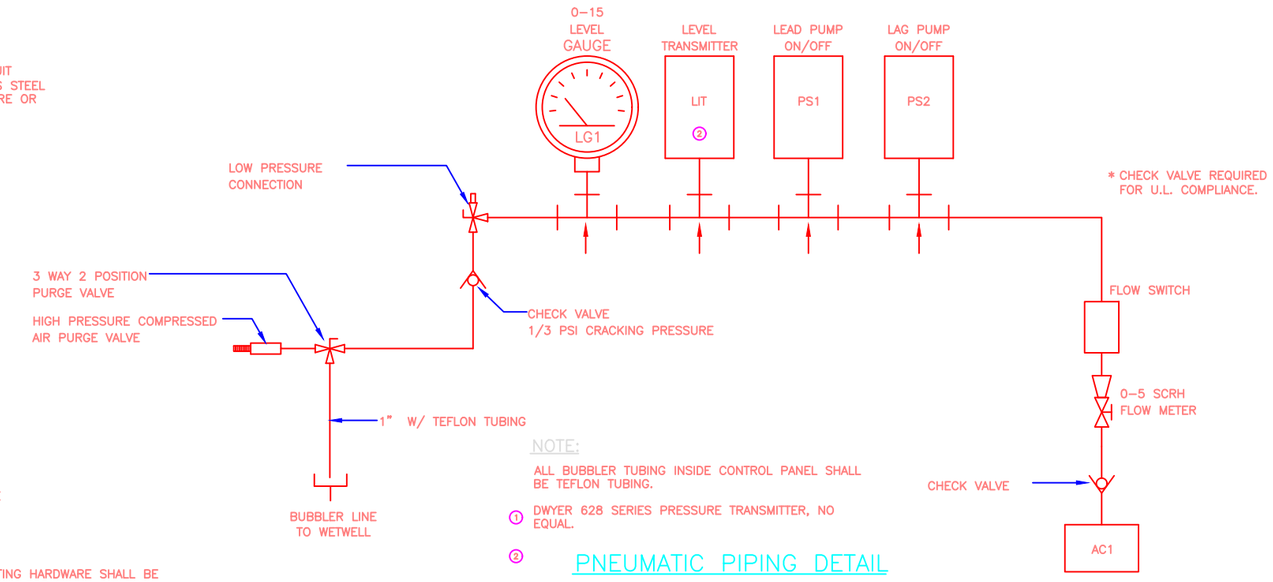

NOTE:

ALL BUBBLER TUBING INSIDE CONTROL PANEL SHALL BE TEFLON TUBING.

1. DWYER 628 SERIES PRESSURE TRANSMITTER, NO EQUAL.
2.

PNEUMATIC PIPING DETAIL

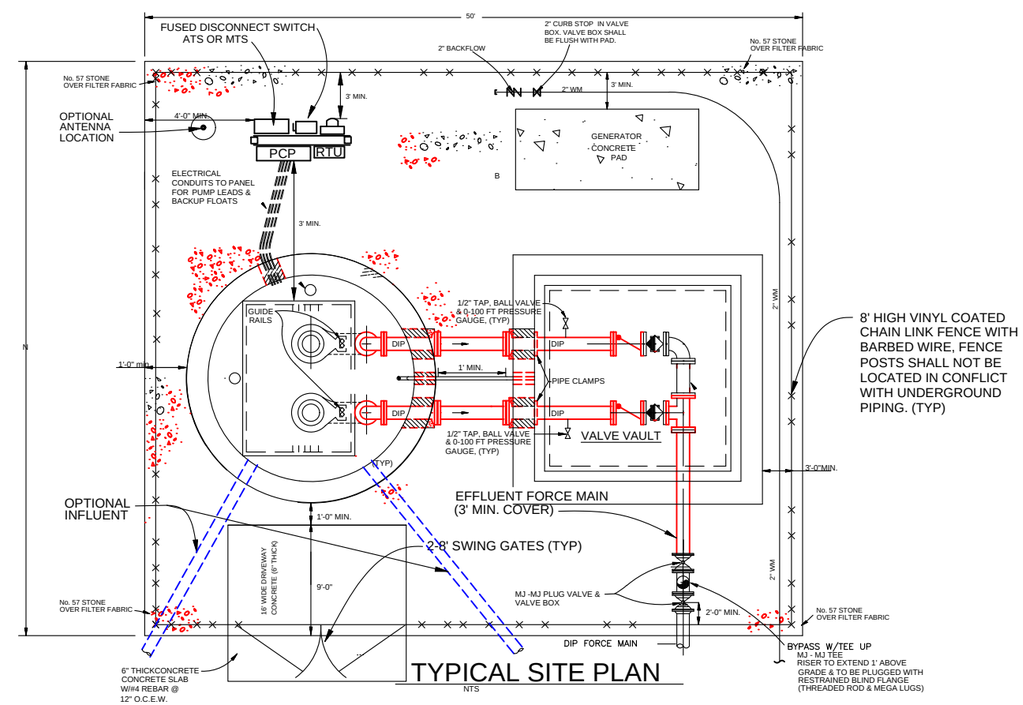

TYPICAL SITE PLAN

NTS

NEXT PREV

RETURN TO TOC

THE CITY OF DAYTONA BEACH
UTILITIES DEPARTMENT

THIS SHEET SHOWS THE MINIMUM INFORMATION AND THE BASIC OUTLINE OF FACILITIES REQUIRED. THIS DRAWING IS PROVIDED FOR INFORMATIONAL PURPOSES ONLY. A PROFESSIONAL ENGINEER SHALL BE REQUIRED TO CERTIFY ALL DETAILS.

SUBMERSIBLE RESIDENTIAL SEWER
LIFT STATION
CONTROL AND RTU
STANDARDS
S-26 (Sheet 7 of 8)

FY-15/16	
Drawing Date: 01/16/13	
Drawn By: JMP	
Checked By: AMS	
Scale: NTS	
Revision Date: 05/2016	
File Name: S-26 7 of 8	
Page 119	

ENGINE–GENERATOR SYSTEM

PROVIDE A COMPLETE FACTORY ASSEMBLED ENGINE–GENERATOR UNIT TO PROVIDE AUTOMATIC STANDBY ELECTRICAL POWER FOR THE PUMPING STATION. AN AUTOMATIC TRANSFER SWITCH (ATS) SHALL ALSO BE PROVIDED TO SENSE LOSS OF UTILITY POWER AND TO INITIATE AUTOMATIC START OF THE ENGINE–GENERATOR UNIT AND THE TRANSFER OF POWER FROM THE UTILITY FEED. ALSO PROVIDE DRY CONTACT ENGINE START ENABLE TO RECEIVE A RUN SIGNAL UPON HIGH WETWELL LEVEL FROM LEVEL FLOAT IN LIFT STATION. ~~PROVIDE CONTACTS IN THE ENGINE–GENERATOR CONTOL PANEL TO SIGNAL COOLDOWN/SHUTDOWN UPON LOW LEVEL IN PUMP STATION FROM LIFT PUMP LOW LEVEL SHUTOFF.~~

PROVIDE COMPLETE ENGINE FUEL SYSTEM, ELECTRONIC GOVERNOR SYSTEM, ENGINE COOLING SYSTEM, ELECTRIC STARTING SYSTEM COMPLETE WITH BATTERIES AND CHARGING SYSTEM, EXHAUST SYSTEM WITH SILENCER, VIBRATION ISOLATION SYSTEM, DIGITAL (MICROPROCESSOR–BASED) ELECTRONIC CONTROLS, OUTPUT METERING (RMS VOLTAGE, CURRENT, FREQUENCY, POWER FACTOR, AND KW HOURS), SOUND–INSULATED OUTDOOR WEATHER–PROOF ENCLOSURE, AND OTHER REQUIRED APPURTENANCES, ALL OF WHICH SHALL BE MOUNTED ON A HEAVY–DUTY STEEL BASE WHICH SHALL BE FIELD MOUNTED ON A CAST IN PLACE CONCRETE FOUNDATION AS SHOWN.

THE ENGINE SHALL BE A DIESEL FUELED, RADIATOR AND FAN COOLED. MINIMUM DISPLACEMENT SHALL BE 256 CUBIC INCHES, WITH A CAST IRON BLOCK V–CONFIGURATION FOR 6 CYLINDERS. THE HORSEPOWER RATING OF THE ENGINE AT IT'S MINIMUM TOLERANCE LEVEL SHALL BE SUFFICIENT TO DRIVE THE ALTERNATOR AND ALL CONNECTED ACCESSORIES.

THE AC GENERATOR SHALL BE; SYNCHRONOUS, FOUR POLE, 2/3 PITCH, REVOLVING FIELD, DRIP–PROOF CONSTRUCTION, SINGLE PRELUBRICATED SEALED BEARING, AIR COOLED BY A DIRECT DRIVE CENTRIFUGAL BLOWER FAN, AND DIRECTLY CONNECTED TO THE ENGINE WITH FLEXIBLE DRIVE DISC. ALL INSULATION SYSTEM COMPONENTS SHALL MEET NEMA MG1 TEMPERATURE LIMITS FOR CLASS H INSULATION SYSTEM. ACTUAL TEMPERATURE RISE MEASURED BY RESISTANCE METHOD AT FULL LOAD SHALL NOT EXCEED 105 DEGREES CENTIGRADE.

THE GENERATOR SET SHALL BE PROVIDED WITH AN OUTDOOR, ALUMINUM SOUND–ATTENUATED ENCLOSURE. THE ENCLOSURE SHALL REDUCE THE SOUND LEVEL OF THE GENERATOR SET WHILE OPERATING AT FULL RATED LOAD TO A MAXIMUM OF 85 DBA AT ANY LOCATION 21 FT FROM THE GENERATOR SET IN A FREE FIELD ENVIRONMENT. THE ENCLOSURE PACKAGE SHALL COMPLY WITH THE REQUIREMENTS OF THE NATIONAL ELECTRICAL CODE FOR ALL WIRING MATERIALS AND COMPONENT SPACING. ALL DOORS SHALL BE LOCKABLE, AND INCLUDE RETAINERS TO HOLD THE DOOR OPEN DURING SERVICE. ENCLOSURE ROOF SHALL BE CAMBERED TO PREVENT RAINWATER ACCUMULATION. OPENINGS SHALL BE SCREENED TO LIMIT ACCESS OF RODENTS INTO THE ENCLOSURE. PROVIDE CHART OF AVAILABLE COLOR SELECTIONS FOR SELECTION OF ENCLOSURE COLOR BY THE OWNER.

ALL ELECTRICAL POWER AND CONTROL INTERCONNECTIONS SHALL BE MADE WITHIN THE PERIMETER OF THE ENCLOSURE. A FACTORY–MOUNTED EXHAUST SILENCER SHALL BE INSTALLED INSIDE THE ENCLOSURE. ALL SHEET METAL SURFACES SHALL BE PRIMED FOR CORROSION PROTECTION AND FINISH PAINTED WITH THE MANUFACTURERS STANDARD COLOR USING A TWO STEP ELECTROCOATING PAINT PROCESS. THE PAINTING PROCESS SHALL RESULT IN A COATING THAT MEETS THE FOLLOWING REQUIREMENTS:
PRIMER THICKNESS, 0.5–2.0 MILS.
TOP COAT THICKNESS, 0.8–1.2 MILS.
GLOSS, PER ASTM D523–89, 80% PLUS OR MINUS 5%.
GLOSS RETENTION AFTER ONE YEAR SHALL EXCEED 50%.
CROSSHATCH ADHESION, PER ASTM D3359–93, 4B–5B.
IMPACT RESISTANCE, PER ASTM D2794–93, 120–160 INCH–POUNDS.
SALT SPRAY, PER ASTM B117–90, 1000+ HOURS.
HUMIDITY, PER ASTM D2247–92, 1000+ HOURS.

THE ENGINE–GENERATOR UNIT SHALL INCLUDE THE NECESSARY FEATURES TO MEET THE REQUIREMENTS OF NFPA 70, NFPA 110, AND IEEE 446. THE UNIT SHALL BE MANUFACTURED BY CUMMINS OR CATERPILLAR.

THE ENGINE–GENERATOR PERFORMANCE SHALL MEET THE FOLLOWING CRITERIA:

RATED POWER OUTPUT (STANDBY):	SIZED TO MEET LIFT STATION DEMAND
OUTPUT VOLTAGES (NOTE: MATCH UTILITY VALUES):	3–PHASE, 60 HZ, 4 WIRE
RATED SPEED:	1,800 RPM
MAXIMUM DIESEL CONSUMPTION AT FULL LOAD:	ENGINEER TO SIZE. MIN. 3 DAY SUPPLY OF DIESEL @ MAX. DESIGN LOAD OF THE LIFT STATION.
VOLTAGE REGULATION, NO LOAD TO FULL LOAD:	+/– 1.0%
RANDOM VOLTAGE VARIATION:	+/– 1.0%
FREQUENCY REGULATION:	ISOCHRONOUS
RANDOM FREQUENCY VARIATION:	+/– 0.6%
OPERATE AT FULL LOAD FOR AMBIENT CONDITIONS:	100 DEG F, AT 100' MSL
EXCITATION	PMG

THE ENGINE–GENERATOR SET SHALL START ON RECEIPT OF A START SIGNAL FROM THE AUTOMATIC TRANSFER SWITCH. THE START SIGNAL SHALL BE VIA HARDWIRED CONNECTION TO THE GENERATOR SET CONTROL, AND THE UNIT SHALL COMPLETE A TIME DELAY START PERIOD AS PROGRAMMED INTO THE CONTROL. THE GENERATOR SET CONTROL SHALL INITIATE THE STARTING SEQUENCE WHICH SHALL INCLUDE:
VERIFICATION THAT THE ENGINE IS ROTATING WHEN THE STARTER IS SIGNALED.
ENGINE START AND ACCELERATION TO START DISCONNECT SPEED. (IF THE ENGINE DOES NOT START, IT SHALL COMPLETE A CYCLE CRANKING PROCESS.
IF THE ENGINE DOES NOT START IT SHALL BE SHUT DOWN AND LOCKED OUT, AND THE CONTROL SYSTEM SHALL INDICATE "FAIL TO START"; THE ENGINE SHALL ACCELERATE TO RATED SPEED AND THE ALTERNATOR TO RATED VOLTAGE. EXCITATION SHALL BE DISABLED UNTIL THE ENGINE HAS EXCEEDED PROGRAMMED IDLE SPEED, AND REGULATED TO PREVENT OVER VOLTAGE CONDITIONS AND OSCILLATION AS THE ENGINE ACCELERATES AND THE ALTERNATOR BUILDS TO RATED VOLTAGE.
UPON REACHING RATED SPEED AND VOLTAGE, THE GENERATOR SET SHALL OPERATE AS DICTATED BY THE CONTROL SYSTEM IN ISOCHRONOUS, SYNCHRONIZE, LOAD SHARE, LOAD DEMAND, OR LOAD GOVERN STATE.
WHEN ALL START SIGNALS HAVE BEEN REMOVED FROM THE GENERATOR SET, IT SHALL COMPLETE A TIME DELAY STOP SEQUENCE. THE DURATION OF THE TIME DELAY STOP PERIOD SHALL BE ADJUSTABLE BY THE OPERATOR.
UPON COMPLETION OF THE TIME DELAY STOP PERIOD, THE GENERATOR SET CONTROL SHALL SWITCH OFF THE EXCITATION SYSTEM AND SHALL SHUT DOWN.
ANY START SIGNAL RECEIVED AFTER THE TIME STOP SEQUENCE HAS BEGUN SHALL IMMEDIATELY TERMINATE THE STOPPING SEQUENCE AND RETURN THE GENERATOR SET TO ISOCHRONOUS OPERATION.

THE GENERATOR SET AND ASSOCIATED EQUIPMENT SHALL BE WARRANTED FOR A PERIOD OF NOT LESS THAN 5 YEARS FROM THE DATE OF COMMISSIONING AGAINST DEFECTS IN MATERIALS AND WORKMANSHIP. THE WARRANTY SHALL BE COMPREHENSIVE. NO DEDUCTIBLES SHALL BE ALLOWED FOR TRAVEL TIME, SERVICE HOURS, REPAIR PARTS COST, ETC. GENERATOR UNIT SHALL MEET THE REQUIREMENTS OF ISO 9001 AND U.L. 2200.

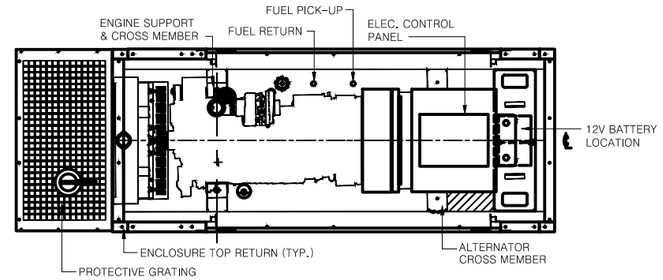

PLAN VIEW WITHOUT ROOF

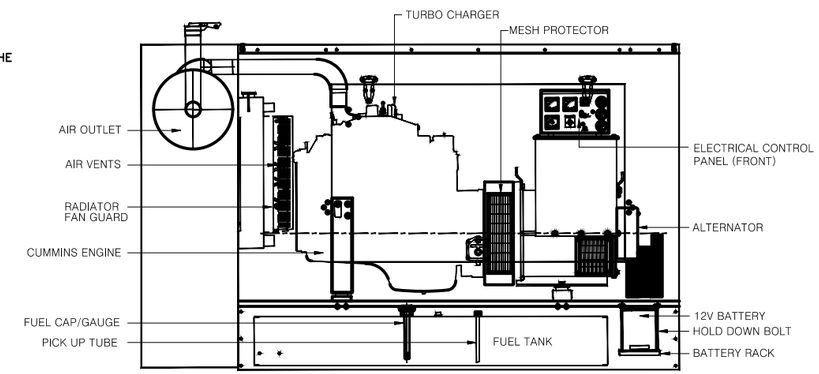

LEFT SIDE VIEW

THE ENCLOSURE, GENERATOR AND BASE MOUNTED FUEL TANK SHALL BE CERTIFIED BY A LICENSED STRUCTURAL PROFESSIONAL ENGINEER LICENSED IN THE STATE OF FLORIDA AND TO BE DESIGN RATED FOR A WIND LOAD RESISTANCE AS REQUIRED BY THE FLORIDA BUILDING CODE. PROVIDE TWO (2) ORIGINALS AND SIX (6) COPIES OF THE P.E. STAMPED CERTIFIED WIND LOAD CALCULATIONS REPORT INDICATING COMPLIANCE TO THE OWNER'S REPRESENTATIVE. THE ENCLOSURE WIND LOAD RATING SHALL BE INCLUDED ON THE MANUFACTURER'S ENCLOSURE DRAWINGS.

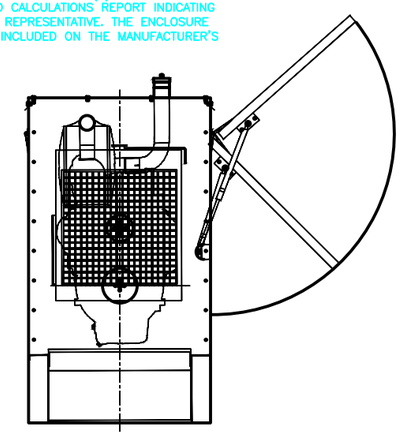

FRONT VIEW

SIZING OF THE GENERATOR SHALL BE SIGNED AND SEALED BY AN ELECTRICAL ENGINEER.

DIESEL STORAGE SYSTEM

PROVIDE A DIESEL STORAGE AND SUPPLY SYSTEM FOR THE ENGINE GENERATOR CONFIGURED AS SHOWN. THE SYSTEM SHALL MEET THE REQUIREMENTS OF THE DIESEL FUEL CODE, THE APPLICABLE PROVISIONS OF FLORIDA STATUTES, CHAPTER 206.874, AND FLORIDA ADMINISTRATIVE CODE, CHAPTER SF–2.001 DIESEL. FUEL TANK TO BE SIZED FOR 500 GALLONS AND SHALL MEET REQUIREMENTS FOR A COMPLETE INSTALLATION AS PER STATE AND LOCAL REQUIREMENTS.

THE GENERATOR SET AND ENCLOSURE SHALL BE MOUNTED AND SHIPPED TO THE JOBSITE ON THE FORMED STEEL SUB–BASE PROVIDED BY THE GENERATOR SUPPLIER. PROVISIONS FOR CRANE UNLOADING OF THE COMPLETE PACKAGE SHALL BE DESIGNED INTO THE BASE OF THE UNIT. NEOPRENE PADS SHALL BE INSTALLED BETWEEN THE FUEL TANK AND THE CONCRETE SLAB. A 500 GALLON BASE MOUNTED FUEL TANK SHALL BE ATTACHED TO THE CONCRETE SLAB WITH STAINLESS STEEL EXPANSION ANCHORS. THE BASE AND ENCLOSURE ASSEMBLY SHALL ALLOW ROOM WITHIN THE PACKAGE TO MOUNT AND MAINTAIN THE SPECIFIED BATTERY CHARGER, ENGINE STARTING BATTERIES, RACKS, AND CABLES, MAIN LINE CIRCUIT BREAKER, AND ENGINE–GENERATOR CONTROL PANEL, AND OTHER ITEMS AS SPECIFIED OR AS SHOWN ON THE DRAWINGS. THE WEIGHT OF THE ENTIRE UNIT CONSISTING OF GENERATOR SET, BASE, ENCLOSURE, AND ALL OTHER SPECIFIED ITEMS INCLUDING ALL LIQUIDS (I.E., FUEL OIL, LUBE OIL, AND COOLING WATER SHALL BE CALCULATED BY THE MANUFACTURER. THE BASE OF THE UNIT SHALL BE DESIGNED AND MANUFACTURED AS A HEAVY DUTY, FORMED STEEL CONSTRUCTION WITH FOUR (4)POINT LIFTING PROVISION TO SUPPORT THE CALCULATED WEIGHT. DETAILS AND MANUFACTURER'S CERTIFICATION OF THE BASE CONSTRUCTION SHALL BE INCLUDED WITH THE DRAWINGS SUBMITTED FOR APPROVAL AS WELL AS ALL WEIGHT CALCULATIONS. THE UNIT SHALL BE EQUIPPED WITH A DOUBLE WALL IN–BASE UL142 FUEL TANK AND SHALL BE SUPPLIED WITH A LOCKABLE, EXTERIOR LOCATED FILL CAP. ALL NECESSARY FUEL AND VENT LINES WITH VENT CAPS FOR PROPER ENGINE PERFORMANCE SHALL BE PROVIDED AS WELL AS A MEANS TO READILY DETECT THE FUEL LEVEL IN THE TANK WITHOUT THE USE OF A MEASURING STICK. THE FUEL TANK BASE MAXIMUM LENGTH & WIDTH DIMENSIONS SHALL BE AS NOTED ON THE DRAWINGS AND BE FORMED FROM STEEL OF A MINIMUM METAL THICKNESS OF 0.25–INCH (1/4–INCH) AND SHALL BE FITTED WITH LOW FUEL LEVEL INNER WALL LEAK ALARM CONTACT FOR LOCAL AND REMOTE ANNUNCIATION. THE FUEL TANK HEIGHT SHALL NOT EXCEED 24 INCHES.

AUTOMATIC TRANSFER SWITCH

PROVIDE AN AUTOMATIC TRANSFER SWITCH (ATS) AS SHOWN. THE ATS SHALL BE RATED TO CARRY 100 PERCENT OF RATED CURRENT CONTINUOUSLY IN THE ENCLOSURE SUPPLIED, IN AMBIENT TEMPERATURES OF 40 TO +60 DEGREES C, RELATIVE HUMIDITY UP TO 95% (NON CONDENSING), AND ALTITUDES UP TO 1,000 FEET. TRANSFER SWITCH EQUIPMENT SHALL HAVE FAULT CURRENT RATINGS SUITABLE FOR USE IN THE APPLICATION, AS INDICATED BY THE AVAILABLE FAULT CURRENT AT THE SITE AS PER THE ELECTRIC UTILITY.THE ATS SHALL BE A CUMMINS–ONAN 3–POLE OR APPROVED EQUAL.

THE ATS SHALL BE DOUBLE THROW, ELECTRICALLY AND MECHANICALLY INTERLOCKED, AND MECHANICALLY HELD IN THE SOURCE 1 AND SOURCE 2 POSITIONS. THE TRANSFER SWITCH SHALL BE SPECIFICALLY DESIGNED TO TRANSFER TO THE BEST AVAILABLE SOURCE IF IT INADVERTENTLY STOPS IN A NEUTRAL POSITION. THE ATS SHALL BE ELECTRICALLY INTERLOCKED IN BOTH AUTOMATIC AND MANUAL OPERATION MODES TO PERFORM THE OPERATION SEQUENCE SPECIFIED. THE POWER TRANSFER MECHANISM SHALL INCLUDE PROVISIONS FOR MANUAL OPERATION UNDER LOAD WITH THE DOOR OF THE CABINET CLOSED. ALL WIRING SHALL BE TAGGED TO MATCH THE SCHEMATIC, SHALL BE UL LISTED 105 DEGREE C, 600 VOLT RATED, AND SIZED AS REQUIRED. CIRCUIT BOARDS SHALL BE CONNECTED WIRING HARNESSES BY MEANS OF LOCKING DISCONNECT PLUG(S). THE 3–POLE ATS SHALL BE PROVIDED WITH A NEUTRAL BUS AND LUGS SIZED TO CARRY 100% OF THE ATS CURRENT RATING. FIELD CONTROL CONNECTIONS SHALL BE MADE ON A COMMON TERMINAL BLOCK THAT IS CLEARLY AND PERMANENTLY LABELED.

THE ATS SHALL INCORPORATE ADJUSTABLE TIME DELAYS FOR GENERATOR SET START (ADJUSTABLE IN A RANGE FROM 0–15 SECONDS); TRANSFER (ADJUSTABLE IN A RANGE FROM 0–120 SECONDS); RETRANSFER (ADJUSTABLE IN A RANGE FROM 0–30 MINUTES); AND GENERATOR STOP (COOLDOWN; ADJUSTABLE IN A RANGE OF 0–30 MINUTES), AND SHALL BE CONFIGURABLE TO CONTROL THE OPERATION TIME FROM SOURCE TO SOURCE (PROGRAM TRANSITION OPERATION) IN OPEN TRANSITION MODE. THE CONTROL SYSTEM SHALL BE CAPABLE OF ENABLING OR DISABLING THIS FEATURE, AND ADJUSTING THE TIME PERIOD TO A SPECIFIC VALUE. A PHASE BAND MONITOR OR SIMILAR DEVICE IS NOT AN ACCEPTABLE ALTERNATE FOR THIS FEATURE.

THE ATS SHALL PROVIDE AN ISOLATED NORMALLY HELD OPEN, AND CLOSE TO START RELAY CONTACT FOR STARTING OF THE ENGINE–GENERATOR SET. OUTPUT CONTACTS SHALL BE FORM C, FOR COMPATIBILITY. THE ATS SHALL PROVIDE RELAY CONTACTS TO INDICATE THE FOLLOWING CONDITIONS: SOURCE 1 AVAILABLE, LOAD CONNECTED TO SOURCE 1, SOURCE 2 AVAILABLE, SOURCE 2 CONNECTED TO LOAD.

THE ATS ENCLOSURE SHALL BE NEMA 4X 304 STAINLESS STEEL (OR BETTER), UL LISTED AND SHALL PROVIDE NEC REQUIRED WIRE BEND SPACE. THE CABINET DOOR SHALL BE KEY LOCKING. SEPARATE ENCLOSURES SHALL BE THE NEMA TYPE SPECIFIED. MANUAL OPERATING HANDLES AND ALL CONTROL SWITCHES (OTHER THAN KEY OPERATED SWITCHES) SHALL BE ACCESSIBLE TO AUTHORIZED PERSONNEL ONLY BY OPENING THE KEY LOCKING CABINET DOOR.

FACTORY TESTING: THE TRANSFER SWITCH SUPPLIER SHALL PERFORM A COMPLETE OPERATIONAL TEST ON THE TRANSFER SWITCH PRIOR TO SHIPPING FROM THE FACTORY. A CERTIFIED TEST REPORT SHALL BE AVAILABLE ON REQUEST. TEST PROCESS SHALL INCLUDE CALIBRATION OF VOLTAGE SENSORS.

AFTER INSTALLATION, THE SUPPLIER SHALL CONDUCT A COMPLETE OPERATION, BASIC MAINTENANCE, AND EMERGENCY SERVICE SEMINAR FOR UP TO 10 PERSONS EMPLOYED BY THE CITY. THE SEMINAR SHALL INCLUDE INSTRUCTION ON OPERATION OF THE TRANSFER EQUIPMENT, NORMAL TESTING AND EXERCISE, ADJUSTMENTS TO THE CONTROL SYSTEM AND EMERGENCY OPERATION PROCEDURES. THE CLASS DURATION SHALL BE AT LEAST 4 HOURS IN LENGTH, AND INCLUDE PRACTICAL OPERATION WITH THE INSTALLED EQUIPMENT.

REINFORCED CONCRETE EQUIPMENT PADS

PROVIDE BUILT–UP PAD AREA FOR NEW CONCRETE FOUNDATIONS TO ELEVATIONS AS SHOWN. USE CLEAN GRANULAR FILL IN 6–INCH LIFTS. GRANULAR FILL SHALL BE CLEAN SAND WITH NO MORE THAN 10% FINES PASSING THROUGH A NO.200 SIEVE. COMPACT TO 95% RELATIVE COMPACTION PER ASTM D1557. PROVIDE TEST REPORT FROM INDEPENDENT TEST LAB SATISFACTORY TO OWNER AND ENGINEER.

COORDINATE FORM PLACEMENT WITH PIPING AND ELECTRICAL CONDUITS AS SHOWN IN THESE DRAWINGS. FORMWORK FOR SLAB SHALL BE IN ACCORDANCE WITH ACI 347, FOR PLACEMENT OF CONCRETE IN ACCORDANCE WITH ACI 304R.

REINFORCING STEEL SHALL BE DEFORMED BARS IN ACCORDANCE WITH ASTM A615, GRADE 60, PLACED ON SUPPORTS IN ACCORDANCE WITH THE CRSI MANUAL OF STANDARD PRACTICE.

CONCRETE MIX SHALL UTILIZE TYPE II PORTLAND CEMENT WITH NATURAL AGGREGATE MEETING ASTM C150 AND ASTM C33 REQUIREMENTS RESPECTIVELY. THE MINIMUM 28–DAY STRENGTH SHALL BE 4,000 PSI. TAKE SAMPLES DURING POUR AND PROVIDE TEST CYLINDER BREAK REPORT FROM INDEPENDENT TEST LAB.

PLACE CONTROL JOINTS AS SHOWN. ROUND OFF ALL TOP EXPOSED EDGES WITH 0.25–INCH RADIUS EDGING TOOL.

PROTECT SURFACES AND WET CURE CONCRETE FOR A MINIMUM OF 7 DAYS AFTER PLACEMENT.

THE CONCRETE SUPPORT PAD FINISHED GRADE SHALL BE 18" ABOVE BASE FLOOD ELEVATION. FUEL TANK VENTS SHALL BE PROTECTED FROM FLOODING.

PREV

RETURN TO TOC

The City of Daytona Beach Utilities Department
List of Acceptable Products

Products that are submitted to the city engineering division prior to beginning project construction and are approved by the city may be substituted on a case by case basis for the products on the acceptable products list.

TABLE OF CONTENTS

San Sewer Category 1 of 4: PIPE MATERIALS

PVC, DR-18 (C 900), DR-26, SDR-26, DR-35 Green Pipe
DIP/Cast Iron Epoxy Lined (Class 350) Pipe
Casing End Seals
Casing Spacers (all sizes) Stainless Steel w/Vinyl Runners

San Sewer Category 2 of 4: VALVES AND ACCESORIES

Gate Valves - General (resilient seat)
Gate Valves - 12" and Smaller (resilient seated only)
Gate Valves 16" - 48" (resilient seated only w/side actuators)
Plug Valves (full flow only)
Blow Off Valves
Air Vacuum or Air/Vac Combination Release Valves
Air Release Valve Enclosures
Valve Boxes

San Sewer Category 3 of 4: PIPE FITTINGS

PVC Sewer Pipe Fittings
Expansion Joints
DIP Sewer Pipe Fittings
Restrained Joints
Tapping Sleeves
Restraint Kits
Rubber Couplings

San Sewer Category 4 of 4: MANHOLE ACCESSORIES

PVC Pipe Manhole Adaptors
Manhole Lids, Frames, and Rings
Flexible Manhole Connectors
Manhole Linings

Category 1 of 4: PIPE MATERIALS

PVC, Green Pipe

1. North American Pipe
2. Diamond
3. NapCo
4. JM Eagle
5. National

Ductile Iron/ Cast Iron Epoxy Coated w/Protecto 401 Lining

1. American Cast Iron Pipe
2. McWane/Clow
3. Griffin
4. US Pipe
5. Tyton

Casing End Seals

1. Advanced Products	1. Model AC & AW
2. BMW	2. BMW wrap around end seal
3. Cascade	3. Model CCES
4. Power Seal	4. Model 4810ES
5. PSI	5. Model C, S, & W
6. CCI	6. Model ESW

Casing Spacers (all sizes) Stainless steel w/ vinyl runners

1. Advanced Products	1. Series SS
2. Cascade	2. Series CCS/ CCPS/ AZ
3. BMW	3. BMW-SS
4. Power Seal	4. Model 4810
5. PSI	5. Series S-G-2
6. PSI-Ranger	6. Ranger II
7. RACI	7. S/T, F/G, P/Q, M/N, E/H
8. CCI	8. CSS-8, CSS-12

Category 2 of 4: VALVES AND ACCESSORIES

Gate Valves - General (resilient seat)
AWWA C509 and C515

1. American Flow Control	1. C509 and C515
2. Mueller	2. C509 and C515
3. Clow	3. C509 and C515
4. Kennedy	4. C509 and C515
5. US Pipe	5. C509 and C515
6. American AVK	6. C509 (only)
7. East Jordan Iron Works	7. C509 and C515

Gate Valves 12" and Smaller (resilient seated only)

1. American Flow Control	1. Series 2500
2. American R/D	2. Series 2000
3. AVK	3. Series 25
4. Clow (McWane Owned)	4. Series F-6100
5. Kennedy (McWane Owned)	5. Series 4571
6. M&H (McWane Owned)	6. Series 4067
7. Mueller	7. Series A2360
8. US Pipe	8. Metroseal 250

Gate Valves 16" - 48" (resilient seated only w/side actuators)

1. American Flow Control	1. Series 2500
2. Clow	2. Series F-6100
3. Mueller	3. Series A2361
4. US Pipe	4. Series 5460
5. Kennedy	5. Series 4571
6. M&H	6. Series 4067

Plug Valves (full flow only)

1. Clow	1. Full Flow Series F-5412, F-5413
2. Dresser	2. Series PEC
3. Dezurik	3. Permaseal Series
4. Mueller/Pratt	
3. Milliken	

Blow Off Valves

	3. Series 625 (Eccentricity style)
1. Hydro Guard	1. Automatic Blow Off
2. Kupferle Foundry Co.	2. Series TF 550
3. Water Plus	3. Series VB 2000

Air, Vacuum or Air/Vac Combination Release Valves (No DI or Cast Iron allowed)

1. ARI	1. ARI, D-025
1. H-TEC	1. 986

Air Release Valve Enclosure

1. Water Plus	1. No. 30 (131632) No. 40 (171730)
2. CDR	2. Boxes & Vaults
2. GlasMasters	2. Boxes & Vaults

Valve Boxes - 5 1/4"

1. U S Foundry
2. East Jordan Iron Works
3. SIP Industries

Category 3 of 4: PIPE FITTINGS

PVC Sewer Pipe Fittings

1. Multi	1. Aqualite
2. Vassallo	2. Gask-O-Weld
3. Plastic Trends	
4. Harco	
5. American	
6. Assured Flow Sales	
7. Griffin	
8. Nappco/Sigma	
9. Star	
10. Union/Tyler	
11. US Pipe	
12. GPK	
13. Multi Fit	

Expansion Joints

1. EBAA
2. Mercer
3. Metraflex
4. Proco

DIP Sewer Fittings

1. U.S. Pipe	1. Mechanical Joint - SSB or Full Body
2. McWane	

Restrained Joints - DIP

1. American	1. Fast Grip Gasket
2. EBAA Iron Inc.	2. Mega-lug series 1100, series 1700 restraint, 2003 PV series RS-3800 restrainer
3. Ford	3. UFR-1400, 1300C series
4. Star	4. Star Grip series 3000, All Grip series 3600
5. US Pipe	5. Field Loc Gasket
6. Sigma	6. One-LOK SLD (3-36")
7. Mueller	7. Aquagrip Restraint System
8. Romac	8. Grip Rings
9. U.S. Pipe/McWane	9. Field LOC Gaskets for Tyton Joint DIP
10. SIP Industries	10. EZ -Grips
11. Tyler Union	11. TufGrip series 1000, series 1500, series 3000 (for bell joint)

Tapping Sleeves - Mechanical joint for all taps on cast iron, ductile iron, all taps including size on size

1. American Flow Control	1. Series 2800
2. Clow	2. Series F-5205, F-5207
3. Mueller	3. Series H-615, H-616, H-619
4. US Pipe	4. Series T-9
5. Smith Blair	5. Series 622
6. JCM	6. Series 412

Restraint Kits

1. Star
2. Sigma
3. JCM
4. Ford
5. SIP Industries

Rubber Couplings

1. Fernco	1. 1056
2. Pipeconx	

Category 4 of 4: MANHOLE ACCESSORIES

PVC Pipe Manhole Adaptors

1. Harrington Corp.	1. PVC Sewer Adapter

Manhole Lids, Frames & Rings

1. U.S. Foundry	1. Series 170, 420G, 580
2. East Jordan Iron Works	1. Series 306
3. EJ USA Inc.	1. Series 1338
4. Ladtech	4. Riser ring

Flexible Manhole Connectors

1. Kor-N-Seal

Manhole Linings

1. Hanson Pipe Co.
2. GSE Studliner
3. Amerplate T-Lock
4. Agrusafe Sure Grip

STORMWATER DETAILS

TABLE OF CONTENTS

PAGE NO.		
128	ST-1	STORM DRAINAGE CONSTRUCTION NOTES (PAGE 1 OF 4)
129	ST-2	STORM DRAINAGE CONSTRUCTION NOTES (PAGE 2 OF 4)
130	ST-3	STORM DRAINAGE CONSTRUCTION NOTES (PAGE 3 OF 4)
131	ST-4	STORM DRAINAGE CONSTRUCTION NOTES (PAGE 4 OF 4)
132	ST-5	EROSION AND SEDIMENT CONTROL NOTES
133	ST-6	FORCE MAIN TESTING REQUIREMENTS
134	ST-7	UTILITY PIPE CONCRETE ENCASEMENT
135	ST-8	RAILROAD CROSSING
136	ST-9	STAKED SILT FENCE
137	ST-10	FLOATING TURBIDITY BARRIER
138	ST-11	EXFILTRATION TRENCH
139	ST-12	FRENCH DRAIN SYSTEM & NOTES (PAGE 1 OF 2)
140	ST-13	FRENCH DRAIN SYSTEM & NOTES (PAGE 2 OF 2)
141	ST-14	PAVEMENT CUT AND PATCH
142	ST-15	STORMWATER MANHOLE
143	ST-16	STORM-SEWER COVER DETAIL & MH GENERAL NOTES
144	ST-17	CONCRETE STORM INLET & APRON
145	ST-18	UNDER CURB/GUTTER CATCH BASIN
146	ST-19	CONCRETE SPILLWAY
147	ST-20	MITERED END SECTION (SINGLE PIPE)
148	ST-21	DRY POND - CROSS SECTION
149	ST-22	WET POND - CROSS SECTION

STORMWATER CONSTRUCTION NOTES

1. ALL MATERIALS AND INSTALLATION AND SEDIMENT AND EROSION CONTROL METHODS USED FOR LAND DEVELOPMENT CODE REQUIRED IMPROVEMENTS FOR SUBDIVISIONS AND SITE PLANS SHALL BE IN CONFORMANCE WITH THE CITY, FDEP, FDOT STANDARD SPECIFICATIONS FOR ROAD AND BRIDGE CONSTRUCTION (LATEST EDITION), AND THE FDOT DESIGN STANDARDS (LATEST EDITION). THE USE OF BEST MANAGEMENT PRACTICES (BMP'S) IS REQUIRED.

2. BEST MANAGEMENT PRACTICES (BMP'S) FOR EROSION AND SEDIMENT CONTROL SHALL BE PLANNED, DESIGNED AND IMPLEMENTED THROUGHOUT THE SITE DEVELOPMENT ENGINEERING AND CONSTRUC-TION PHASES.

3. ALL DEWATERING ACTIVITIES EITHER DIRECTLY DISCHARGED OR THAT SUBSEQUENTLY USE THE CITY'S STORMWATER SYSTEM TO CONVEY GROUND OR SURFACE WATER FROM A SITE SHALL REQUIRE A STANDARD OR GENERAL USE PERMIT AS PER ARTICLE 7 SECTION 7 OF THE LAND DEVELOPMENT CODE. A PERMIT SHALL BE REQUIRED PRIOR TO ENGAGING IN ANY DEWATERING ACTIVITIES, OR IN ANY CON-STRUCTION ACTIVITIES. DEWATERING ACTIVITIES INCLUDE THE REMOVAL OF GROUND WATER FROM A CONSTRUCTION SITE, ENCLOSED VAULT, COFFERDAM, OR TRENCHES ALLOWING CONSTRUCTION OR MAIN-TENANCE TO BE DONE IN THE DRY, OR ANY ACTIVITY WHICH CHANGES THE IMPERVIOUS AREA OF LAND. SITE SPECIFIC PERMITS SHALL REQUIRE THE PAYMENT OF A PER ACRE FEE BASED ON THE SIZE OF THE DEVELOPMENT. GENERAL PURPOSE PERMITS SHALL REQUIRE THE PAYMENT OF AN ANNUAL FEE BASED ON ROUTINE SCHEDULE OF MAINTENANCE ACTIVITIES DISCHARGING DIRECTLY OR SUBSEQUENTLY INTO THE CITY'S MS4. DEWATERING PERMIT APPLICATIONS ARE FOUND AT http://www.codb.us/index.aspx?NID=262. FEES ARE SUBJECT TO ARTICLE 20 SECTION 3.1 OF THE LAND DEVELOPMENT CODE AND MUST BE SUBMITTED TO THE CITY OF DAYTONA BEACH UTILITY DEPARTMENT AT 125 BASIN STREET SUITE 130, DAYTONA BEACH FL 32114 BEFORE ANY USE OF THE MS4 WILL BE ALLOWED. FAILURE TO COMPLY WILL RESULT IN THE TERMINATION OF ACCESS TO THE CITY'S MS4 SYSTEM.

4. CONTRACTOR SHALL FOLLOW REQUIRED EROSION AND SEDIMENT CONTROL PRACTICES AND INCLUDE AN EROSION CONTROL PLAN FOR REVIEW AND APPROVAL BY THE CITY PRIOR TO CONSTRUCTION. ALL CONSTRUCTION ACTIVITIES SHALL CONFORM TO THE CITY'S EROSION AND SEDIMENT CONTROL STANDARD DETAILS ST-2.

5. CONTRACTOR WILL FOLLOW ALL OF THE CITY'S REQUIRED WASTE MANAGEMENT PRACTICES. ALL CONSTRUCTION, RENOVATION, AND DEMOLITION SITES ARE TO BE KEPT CLEAN AND FREE OF REFUSE, DEBRIS, AND LITTER DURING THE CONSTRUCTION, RENOVATION, OR DEMOLITION PROCESS. A CERTIFICATE OF OCCUPANCY FOR A NEWLY CONSTRUCTED OR RENOVATED BUILDING SHALL NOT BE ISSUED UNTIL ALL REFUSE AND LITTER CAUSED BY THE CONSTRUCTION OR REMODELING IS REMOVED FROM THE SITE AS PER THE DAYTONA BEACH CODE OF ORDINANCES CHAPTER 28 SECTION 78-5 AND 78-8.

6. ALL DEVELOPMENT PLANS SHALL BE CONSISTENT WITH THE DAYTONA BEACH LAND DEVELOPMENT CODE ARTICLE 1 PURPOSE ADMINISTRATION AND ENFORCEMENT, ARTICLE 5 SECTION 2 STORMWATER MANAGEMENT, ARTICLE 4 LAND DEVELOPMENT ORDERS AND PROCEDURES, ARTICLE 5 SUBDIVISION AND SITE PLANS SECTION AND ARTICLE 7 SECTION 4 FLOOD PLAIN MANAGEMENT.

7. PIPED STORMWATER SYSTEMS SHALL HAVE A MINIMUM DRAINAGE MAINTENANCE EASEMENT AND ACCESS WIDTH OF 20 FEET, AND MAY BE INCREASED DEPENDING UPON THE SIZE AND DEPTH OF PIPE.

8. CONCRETE EROSION CONTROL BMP'S MUST BE PROVIDED WHERE SWALES OR CULVERTS INTERCEPT DRAINAGE DITCHES.

9. SOIL EROSION AND SEDIMENT CONTROL BMP MEASURES, SATISFACTORY TO THE ST. JOHNS RIVER WATER MANAGEMENT DISTRICT, FDEP AND THE CITY, SHALL BE EMPLOYED DURING CONSTRUCTION.

NEXT

RETURN TO TOC

STORMWATER CONSTRUCTION NOTES
(CONT'D)

10. IN GENERAL, ALL RETENTION/DETENTION SITES MUST BE CONSTRUCTED AND VEGETATED AS NECESSARY ON ALL PROJECTS PRIOR TO ANY ROAD, PARKING LOT, OR BUILDING CONSTRUCTION COMMENCING OR AS CURRENT PERMIT CONDITIONS DICTATE. SEWER AND WATER MAINS MAY BE INSTALLED PRIOR TO RETENTION/DETENTION SITE CONSTRUCTION IF DEWATERING IS NOT REQUIRED. HOWEVER BMP'S FOR EROSION AND SEDIMENT CONTROL WILL BE IMPLEMENTED AS NECESSARY.

11. THE CONTRACTOR SHALL BE RESPONSIBLE TO OBTAIN ANY AND ALL DEWATERING PERMITS THAT MAY BE REQUIRED (SEE ST-1A NOTE 3).

12. IT SHALL BE THE RESPONSIBILITY OF THE CONTRACTOR TO REVIEW AND MAINTAIN A COPY OF THE SJRWMD, NPDES, AND ALL OTHER JURISDICTIONAL PERMITS AT THE CONSTRUCTION SITE, AND ABIDE BY ALL CONDITIONS OF THOSE PERMITS.

13. LANDSCAPE PLANS SHALL CLEARLY DEPICT THE DESIGN LOCATION OF TEMPORARY AND PERMANENT PLANTINGS RELATIVE TO THE LOCATION OF PUBLIC UTILITIES AND STORMWATER INFRASTRUCTURE IN ORDER TO EVALUATE POTENTIAL CONFLICTS.

14. THE MAXIMUM PERMISSIBLE SLOPE OF ANY NEW SITE GRADING IS 1:3 (VERTICAL:HORIZONTAL). THIS LIMIT SHALL BE APPLIED TO ALL AREAS EXCEPT STORMWATER CONVEYANCE AND TREATMENT SYSTEMS WHICH HAVE A MAXIMUM SIDE SLOPE OF 1:4 (EXCEPT BELOW THE WATER TABLE WHERE STEEPER SLOPES ARE PERMISSIBLE).

15. ALL SWALES AND DITCHES SHALL HAVE A MAXIMUM PERMITTED FRONT (SIDE) SLOPE NOT STEEPER THAN 1 TO 4. THE MAXIMUM PERMITTED BACK (SIDE) SLOPE, SHALL BE 1:3, PROVIDED THAT A 2' WIDE BERM IS INSTALLED. DESIGN CENTERLINE AND TOP-OF-BANK ELEVATIONS SHALL BE NOTED AT INTERVALS OF 100' AND AT SIGNIFICANT GRADE CHANGES.

16. SWALES THAT ARE NORMALLY DRY AND INTENDED FOR CONVEYANCE OF STORMWATER RUNOFF AND ARE NOT INTENDED FOR RETENTION SHALL HAVE A MINIMUM DRAINAGE MAINTENANCE EASEMENT WIDTH MEASURING 15 FEET. SWALED AREAS INTENDED FOR RETENTION SHALL PROVIDE APPROPRIATE EASEMENT AREAS FOR ACCESS AND MAINTENANCE MEASURED UPLAND FROM THE TOP OF BANK. AT A MINIMUM, THE SAID EASEMENT SHALL MEASURE 10 FEET IN WIDTH FROM THE TOP OF THE SWALE.

17. NORMAL ROADSIDE SWALES ARE PERMITTED TO BE CONSTRUCTED TO A MAXIMUM DEPTH OF 18" BELOW THE OUTSIDE EDGE OF PAVEMENT OR CONCRETE CURB.

18. WHEN CULVERTS ARE INSTALLED TO MAINTAIN THE FLOW OF EXISTING DRAINAGE WAYS WHERE NEWLY PROPOSED ROADS WOULD OTHERWISE SEVER THE DRAINAGE RIGHT-OF-WAY, THEN CULVERTS CROSSING RIGHTS-OF-WAY SHALL EXTEND FROM RIGHT-OF-WAY LINE TO RIGHT-OF-WAY LINE UNDER THE ROADWAY. CULVERTS SHALL BE DESIGNED TO ACCOMODATE THE FLOW FROM THE 100 YEAR - 24 HOUR STORM EVENT WITHOUT FLOODING ADJACENT PROPERTY OR SURCHARGING THE SAID ROADWAY.

19. WET POND DEPTHS SHALL BE EIGHT FEET (8') MINIMUM TO FIFTEEN FEET (15') MAXIMUM, MEASURED FROM THE TOP OF BANK.

20. WHEN A WET POND IS INCORPORATED WITHIN A SUBDIVISION AND IS ABUTTED BY LOTS, SUCH ABUTTING LOT LINES SHALL BE EXTENDED INTO THE LAKE PROPORTIONATELY ENCOMPASSING ALL OF THE LAKE AREA.

21. WET POND INFLOW AND OUTLET STRUCTURES SHALL GENERALLY BE CONSTRUCTED WITH REINFORCED CONCRETE AND SHALL BE SUBJECT TO THE APPROVAL OF THE CITY. SKIMMERS FOR WET PONDS SHALL BE CONSTRUCTED SUCH THAT THE BOTTOM EXTENDS 6" BELOW THE NORMAL WATER LEVEL AND 6" ABOVE THE OVERFLOW. FOR DRY PONDS, THE SKIMMER BOTTOM SHALL BE SET 6" BELOW THE LOWEST OVERFLOW ELEVATION AND 6" ABOVE THE HIGHEST POINT OF OVERFLOW. ALL SKIMMERS SHALL BE CONSTRUCTED OF MINIMUM 1/4" THICK ALUMINUM OR FIBERGLASS ADEQUATELY SUPPORTED TO PREVENT DEFLECTION.

NEXT

RETURN TO TOC

STORMWATER CONSTRUCTION NOTES
(CONT'D)

22. THE CITY MAY REQUEST THAT THE DEVELOPER SUBMIT A REPORT BY A QUALIFIED HYDROLOGIST OR HYDROGEOLOGIST ON THE IMPACT THE WET POND WILL HAVE ON NEIGHBORING WATER TABLE ELEVATIONS BOTH DURING CONSTRUCTION AND AFTER LAKE COMPLETION. THE CITY MAY REQUIRE GROUNDWATER MONITORING DURING THE LAKE EXCAVATION.

23. ADEQUATE MAINTENANCE BERMS, MINIMUM 10' IN WIDTH, SHALL BE PROVIDED AROUND THE ENTIRE PERIMETER OF ALL WET PONDS AND ASSOCIATED OUTFALLS DISCHARGING INTO AND OUT OF LAKES. APPLICABLE CROSS SECTIONS SHALL BE INCLUDED ON ALL FINAL DEVELOPMENT PLANS.

24. DEVELOPMENT PLANS FOR ALL STORMWATER MANAGEMENT SYSTEMS SHALL CONTAIN POP-OFF DATA (OVERFLOW), BOTTOM ELEVATION, NORMAL WATER LEVELS, MEAN ANNUAL SEASONAL HIGH WATER TABLE ELEVATION, TREATMENT VOLUME AND CORRESPONDING ELEVATION, 100 YEAR HIGH WATER LEVELS, AND THE DESIGN TAILWATER ELEVATION (IF APPLICABLE).

25. ALL STORM SEWERS AND CULVERTS LOCATED IN ROADWAY RIGHT-OF-WAYS AND ROADWAY EASEMENTS SHALL BE A MINIMUM OF CLASS III O-RING REINFORCED CONCRETE PIPE. OUTSIDE OF ROADWAY EASEMENTS AND R.O.W., PIPE MAY BE MADE OF ALTERNATE MATERIALS INCLUDING:

    A. SMOOTH INNER WALL HIGH DENSITY POLYETHYLENE (HDPE) IN ACCORDANCE WITH AASHTO M-294, AASHTO MP7, ASTM D3350 AND ASTM D2412 FOR SIZES UP TO 42" IN DIAMETER OR

    B. PVC IN ACCORDANCE WITH THE PROVISION NOTED IN THE "SEWER DETAILS" OF THESE SPECIFICATIONS.

26. ALL STORM SEWER PIPE JOINTS LOCATED IN ROADWAY RIGHT-OF-WAYS AND ROADWAY EASEMENTS SHALL BE ENTIRELY WRAPPED WITH NON-WOVEN FILTER FABRIC WITH A MINIMUM WIDTH OF 24" AND A MINIMUM OF 24" OVERLAP. GASKETS ARE NOT PERMITTED AS AN EQUIVALENT SUBSTITUTE FOR MEETING THIS REQUIREMENT. THIS PRACTICE IS ENCOURAGED ON PRIVATE SITES. ADDITIONALLY, ALL JOINTS SHALL BE RUBBER GASKETED FOR BOTH ROUND AND ELLIPTICAL PIPE.

27. DEPTH OF COVER MEASURED TO THE TOP OF PIPE (INCLUDING THE BELL JOINT) SHALL BE A MINIMUM OF 3 FEET OVER RCP. DEVIATION FROM THIS REQUIREMENT MAY BE ALLOWED BY INCREASING THE PIPE'S STRUCTURAL STRENGTH. IF AN ALTERNATE MATERIAL IS APPROVED, DEPTH OF COVER SHALL MEET MANUFACTURER'S RECOMMENDATION.

28. ALL STORM DRAINAGE PIPES LOCATED IN ROADWAY RIGHT-OF-WAYS AND ROADWAY EASEMENTS SHALL BE A MINIMUM OF FIFTEEN INCH (15") INSIDE DIAMETER OR EQUIVALENT. STORM DRAINAGE PIPES SMALLER THAN 15" ARE PERMITTED ON PRIVATE SITE PLANS PROVIDING THAT MAINTENANCE SHALL BE PERFORMED BY THE OWNER.

29. FOR NON-METALLIC STORMWATER FORCE MAINS A #12 UF INSULATED SINGLE STRAND COPPER WIRE SHALL BE ATTACHED TO ALL PIPES AND TERMINATED AT THE VALVES IN ACCORDANCE WITH RECLAIM WATER VALVE DETAIL RW-4.

30. STORM INLETS, MANHOLES, AND CATCH BASINS SHALL BE FDOT COMPLIANT. EITHER POURED IN PLACE OR PRECAST REINFORCED CONCRETE STRUCTURES SHALL BE REQUIRED AT EACH CHANGE OF PIPE SIZE OR CHANGE IN PIPE DIRECTION. ALL STRUCTURES SHALL BE IN COMPLIANCE WITH ASTM C-478 AND SHALL HAVE 6" THICK WALLS. THINNER WALLS MAY BE PERMITTED PROVIDING THAT THE DESIGN IS IN ACCORDANCE WITH FDOT STANDARD INDEX NO. 200 AND NO. 201. IN ADDITION, THIS REQUIREMENT MUST BE REFLECTED ON BOTH THE SHOP DRAWING AND AS-BUILT PLANS. STRUCTURES PLACED IN HIGH TRAFFIC AREAS SHALL BE OF TRAFFIC BEARING CONSTRUCTION IN ACCORDANCE WITH FDOT STANDARDS.

NEXT

RETURN TO TOC

STORMWATER CONSTRUCTION NOTES
(CONT'D)

31. STORM INLETS SHALL BE SPACED IN SUCH A MANNER AS TO ACCEPT ONE HUNDRED (100) PERCENT OF THE DESIGN STORM RUNOFF WITHOUT IMPEDING THE FLOW OF TRAFFIC. FOR ROADWAY SECTIONS WITH DESIGN SPEEDS OF 45 MPH AND LESS AND WITHOUT FULL WIDTH SHOULDERS, SPREAD RESULTING FROM A RAINFALL INTENSITY OF FOUR INCHES (4") PER HOUR SHALL NOT EXCEED ONE-HALF OF THE TRAVEL LANE ADJACENT TO THE GUTTER. FOR SITE PLANS, INLET SPACING SHALL BE DESIGNED TO ACCEPT ONE HUNDRED (100) PERCENT OF THE RUNOFF FROM A RAINFALL INTENSITY OF FOUR INCHES (4") PER HOUR WITHOUT RESULTING IN PONDING OF WATER AROUND THE INLET.

32. FOR CONNECTIONS BETWEEN INLETS WITH PIPING 15" IN DIAMETER AND LARGER, THE MAXIMUM DISTANCES BETWEEN INLETS AND / OR CLEAN-OUT JUNCTION BOXES SHALL BE 300 FEET. CULVERTS SHALL BE SLOPED TO MAINTAIN A MINIMUM SELF-CLEANING VELOCITY OF 2.5 FEET PER SECOND USING A MANNING'S 'n' OF 0.012. SPACING FOR CLEAN-OUTS AND INLETS FOR SMALLER PIPING SHALL BE REDUCED AND EVALUATED ON A CASE BY CASE BASIS.

33. ALL STORMWATER INLETS SHALL MEET FDOT CRITERIA IN THE FDOT DESIGN STANDARD LATEST EDITION.

RETURN TO TOC

EROSION & SEDIMENT CONTROL NOTES

1. ALL CONSTRUCTION ACTIVITIES SHALL INCORPORATE BEST MANAGEMENT PRACTICES (BMP'S) TO CONTROL EROSION, SEDIMENTATION, AND THE POTENTIAL FOR DOWNSTREAM WATER QUALITY DEGRADATION.

2. CONTRACTOR SHALL MINIMIZE DISTURBANCE OF EXISTING VEGETATION, (PARTICULARLY AROUND THE PROJECT PERIMETER) AND ADJACENT EXISTING DRAINAGE PATTERNS TO THE MAXIMUM EXTENT PRACTICAL DURING THE CONSTRUCTION PROCESS.

3. SILT FENCES AND TURBIDITY BARRIERS SHALL BE INSTALLED ON SITE AND APPROVED BY THE CITY PRIOR TO CONSTRUCTION, AND SHALL BE INSPECTED WEEKLY BY THE CONTRACTOR AND CORRECTIVE ACTION TAKEN AS NECESSARY.

4. STORMWATER RETENTION, DETENTION, STORAGE AND CONVEYANCE SYSTEMS MUST BE EXCAVATED TO ROUGH GRADE PRIOR TO BUILDING CONSTRUCTION OR PLACEMENT OF IMPERVIOUS SURFACE WITHIN THE AREA SERVED BY THOSE SYSTEMS. ADEQUATE MEASURES MUST BE TAKEN TO PREVENT SILTATION OF THESE TREATMENT SYSTEMS AND CONTROL STRUCTURES DURING CONSTRUCTION. SILTATION MUST BE REMOVED FROM THE STORMWATER SYSTEM WHEN HALF FULL AND IMMEDIATELY PRIOR TO FINAL GRADING AND GRASSING OF THE PROJECT.

5. CONTRACTOR SHALL SOD ALL SWALES AND STORMWATER FACILITIES IN ACCORDANCE WITH TEMPORARY BMP'S WITHIN 14 DAYS AFTER CONSTRUCTION. THIS IS REQUIRED TO STABILIZE THE SLOPES AND MINIMIZE EROSION.

6. DURING ALL CONSTRUCTION OF THE PERMITTED SYSTEM INCLUDING STABILIZATION AND REVEGETATION OF DISTURBED SURFACES, CONTRACTOR IS RESPONSIBLE FOR THE SELECTION, IMPLEMENTATION, AND OPERATION OF ALL EROSION AND SEDIMENT CONTROL MEASURES REQUIRED TO RETAIN ALL SEDIMENT ONSITE AND PREVENT VIOLATIONS OF THE WATER QUALITY STANDARDS IN ACCORDANCE WITH THE FLORIDA ADMINISTRATIVE CODE AND PROJECT PERMIT REQUIREMENTS.

7. THE CONTRACTOR SHALL CONSTRUCT AND MAINTAIN A PROTECTIVE COVER (VEGETATIVE OR SUITABLE ALTERNATIVE) FOR EROSION AND SEDIMENT CONTROL ON ALL LAND SURFACES EXPOSED OR DISTURBED BY CONSTRUCTION OF THE PERMITTED PROJECT, UNLESS MODIFIED BY ANOTHER CONDITION OF THE PERMIT OR OTHERWISE SPECIFIED ON A DISTRICT APPROVED EROSION AND SEDIMENT CONTROL PLAN. THE PROTECTIVE COVER MUST BE INSTALLED WITHIN FOURTEEN (14) DAYS AFTER FINAL GRADING OF THE AFFECTED LAND SURFACE. A PERMANENT VEGETATIVE COVER MUST BE ESTABLISHED WITHIN 60 DAYS OF IT'S INSTALLATION. THE PERMITTEE'S REQUIREMENT TO MAINTAIN COVER ON OFFSITE AND ONSITE SURFACES SHALL NOT BE COMPLETE UNTIL AFTER THE WATER MANAGEMENT DISTRICT RECEIVES THE PERMITTEE'S STATEMENT OF COMPLIANCE.

8. AT A MINIMUM, SILT FENCES AND TURBIDITY BARRIERS SHALL BE INSTALLED PER PLAN. ADDITIONAL BMP MEASURES MUST BE TAKEN TO MINIMIZE IMPACTS OF RECEIVING WATERS SUCH AS THE USE OF APPROVED BARRIERS AT INLETS, ADDITIONAL SILT FENCING, SOIL ANTI-TRACKING DEVICES AND SODDING.

9. IT SHALL BE THE CONTRACTOR'S RESPONSIBILITY TO MAINTAIN THE PROJECT LIMITS IN COMPLIANCE WITH ALL JURISDICTIONAL PERMIT AND CITY REQUIREMENTS.

10. ANY TIME THE CONTRACTOR NEEDS TO SUBMIT A NOTICE OF INTENT TO USE A GENERAL PERMIT FOR STORMWATER DISCHARGE FROM LARGE AND SMALL CONSTRUCTION ACTIVITIES, A COPY OF THE PERMIT SHALL ALSO BE SUBMITTED TO THE CITY OF DAYTONA BEACH UTILITIES DEPARTMENT.

11. THE CONTRACTOR SHALL AS A MINIMUM PREPARE AND IMPLEMENT AN EROSION AND SEDIMENT CONTROL PLAN IN ACCORDANCE WITH FLORIDA DEPARTMENT OF ENVIRONMENTAL PROTECTION (FDEP) GUIDELINES.

12. DEWATERING ACTIVITIES SHALL BE APPROVED BY THE UTILITIES DEPARTMENT BEFORE DISCHARGING INTO THE CITY'S MS4 SYSTEM (ST-1A NOTE 3).

RETURN TO TOC

STORMWATER FORCE MAIN CONSTRUCTION & DESIGN STANDARDS

TESTING REQUIREMENTS:

1. THE CONTRACTOR SHALL EMPLOY AN INDEPENDENT TESTING LABORATORY AT HIS OWN EXPENSE TO INSURE THAT COMPACTION OF ALL FILL MATERIAL IS COMPLETED PROPERLY. TESTS SHALL BE DONE ONE FOOT ABOVE THE PIPE AND THEN AT ONE FOOT VERTICAL INTERVALS UNTIL FINAL GRADE IS REACHED.
   IDENTIFICATION OF TEST LOCATIONS SHALL BE CLEARLY INDICATED ON TEST REPORTS. TEST RESULTS SHALL BE FORWARDED PROMPTLY TO THE CITY'S DESIGNATED SITE INSPECTOR.
2. ALL TESTING REQUIRED BY THE CITY SHALL BE PAID FOR BY THE CONTRACTOR/DEVELOPER.
3. ALL PROPOSED WATERMAINS SHALL BE FLUSHED, PRESSURE TESTED AND CLEARED FOR SERVICE IN ACCORDANCE WITH THE LATEST AWWA STANDARDS AND THE FLORIDA DEPARTMENT OF ENVIROMENTAL PROTECTION REQUIREMENTS. THE CONTRACTOR SHALL NOTIFY THE CITY'S DESIGNATED INSPECTOR WHO SHALL COORDINATE WITH CITY PERSONNEL AT THE WATER OR WASTEWATER TREATMENT PLANT (AS APPROPRIATE) AT LEAST 2 (TWO) BUSINESS DAYS PRIOR TO BEGINNING A FULL–DIAMETER FLUSH OF THE MAINS PRIOR TO THE COMMENCEMENT OF PRESSURE TESTING (SUBJECT TO AVAILABILITY).
4. WATERMAINS SHALL BE PRESSURE TESTED TO 150 PSI FOR 4 HOURS. TESTING SHALL BE IN ACCORDANCE WITH AWWA C–600 AND AWWA C–605 AS APPLICABLE, WITH ALLOWABLE LEAKAGE TO BE X GAL/HR PER X" DIA. OF PIPE, PER X' OF MAIN TO BE TESTED.

ALLOWABLE LEAKAGE PER 1000 FT. OF PIPELINE * –GPH

AVERAGE TEST PRESSURE (PSI)	NOMINAL PIPE DIAMETER – INCHES																		AVERAGE TEST PRESSURE (PSI)
	3	4	6	8	10	12	14	16	18	20	24	30	36	42	48	54	60	64	
450	0.48	0.64	0.95	1.27	1.59	1.91	2.23	2.55	2.87	3.18	3.82	4.78	5.73	6.69	7.64	8.60	9.56	10.19	450
400	0.45	0.60	0.90	1.20	1.50	1.80	2.10	2.40	2.70	3.00	3.60	4.50	5.41	6.31	7.21	8.11	9.01	9.61	400
350	0.42	0.56	0.84	1.12	1.40	1.69	1.97	2.25	2.53	2.81	3.37	4.21	5.06	5.90	6.74	7.58	8.43	8.99	350
300	0.39	0.52	0.78	1.04	1.30	1.56	1.82	2.08	2.34	2.60	3.12	3.90	4.68	5.46	6.24	7.02	7.80	8.32	300
275	0.37	0.50	0.75	1.00	1.24	1.49	1.74	1.99	2.24	2.49	2.99	3.73	4.48	5.23	5.98	6.72	7.47	7.97	275
250	0.36	0.47	0.71	0.95	1.19	1.42	1.66	1.90	2.14	2.37	2.85	3.56	4.27	4.99	5.70	6.41	7.12	7.60	250
225	0.34	0.45	0.68	0.90	1.13	1.35	1.58	1.80	2.03	2.25	2.70	3.38	4.05	4.73	5.41	6.03	6.76	7.21	225
200	0.32	0.43	0.64	0.85	1.06	1.28	1.48	1.70	1.91	2.12	2.55	3.19	3.82	4.46	5.09	5.73	6.37	6.80	200
175	0.30	0.40	0.59	0.80	0.99	1.19	1.39	1.59	1.79	1.98	2.38	2.98	3.58	4.17	4.77	5.36	5.96	6.36	175
150	0.28	0.37	0.55	0.74	0.92	1.10	1.29	1.47	1.66	1.84	2.21	2.76	3.31	3.86	4.41	4.97	5.52	5.88	150
125	0.25	0.34	0.50	0.67	0.84	1.01	1.18	1.34	1.51	1.68	2.01	2.52	3.02	3.53	4.03	4.53	5.04	5.37	125
100	0.23	0.30	0.45	0.60	0.75	0.90	1.05	1.20	1.35	1.50	1.80	2.25	2.70	3.15	3.60	4.05	4.50	4.80	100

** IF THE PIPELINE UNDER TEST CONTAINS SECTIONS OF VARIOUS DIAMETERS, THE ALLOWABLE LEAKAGE WILL BE THE SUM OF THE COMPUTED LEAKAGE FOR EACH SIZE.*

$$L = \frac{SD\sqrt{P}}{133{,}200}$$

WHERE:

L = ALLOWABLE LEAKAGE, IN GALLONS PER HOUR
S = LENGTH OF PIPE TESTED, IN FEET
D = NOMINAL DIAMETER OF PIPE, IN INCHES
P = AVERAGE TEST PRESSURE DURING THE LEAKAGE TEST, IN POUNDS PER SQUARE INCH (GAUGE)

RETURN TO TOC

THE CITY OF DAYTONA BEACH
UTILITIES DEPARTMENT

STORMWATER FORCE MAIN TESTING REQUIREMENTS NOTES
ST–6

FY–15/16
Drawing Date: 11/10
Drawn By: KLH
Checked By: JMP
Scale: NTS
Revision Date:
File Name: Force Main Testing ST–6

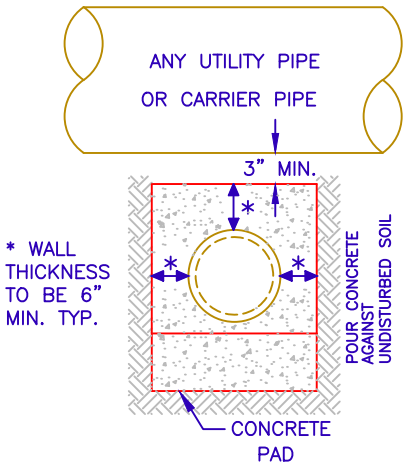

SECTION "A"–"A"

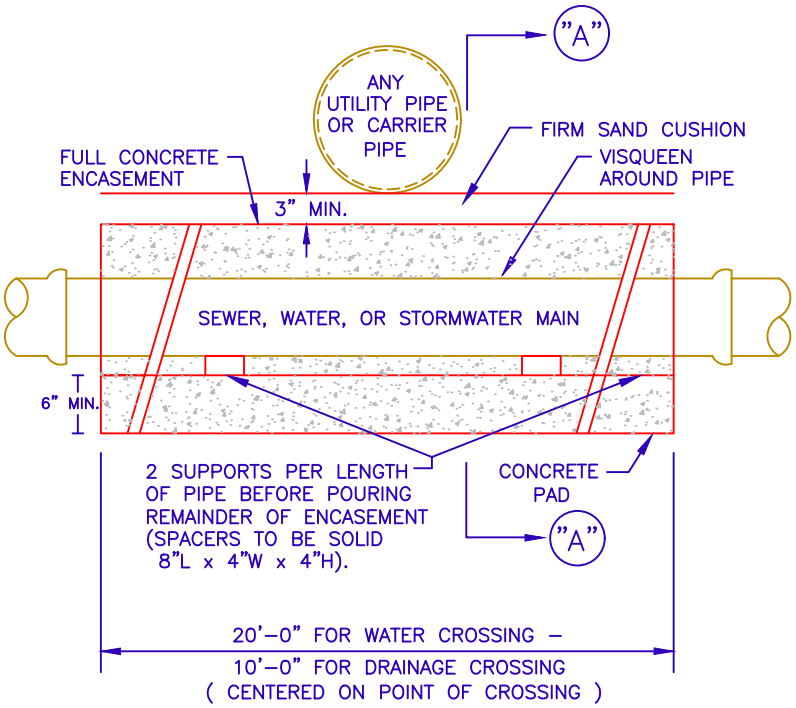

ELEVATION

NOTES:

1. ALL CONCRETE SHALL BE 3000 PSI MINIMUM STRENGTH AT 28 DAYS.
2. MAIN SHALL BE LOCATED ABOVE OR BELOW ENCASEMENT AS SHOWN ON PLANS OR AS DETERMINED IN THE FIELD, USE ENCASEMENT WHERE VERTICAL CLEARANCE IS LESS THAN 12 INCHES.

RETURN TO TOC

THE CITY OF DAYTONA BEACH
UTILITIES DEPARTMENT

UTILITY PIPE
CONCRETE ENCASEMENT
DETAIL
ST–7

FY–15/16	
Drawing Date: 01/08	
Drawn By: KLH	
Checked By: JMP	
Scale: NTS	
Revision Date: 05/13	
File Name: Utility Pipe Concrete Encasement ST–7	

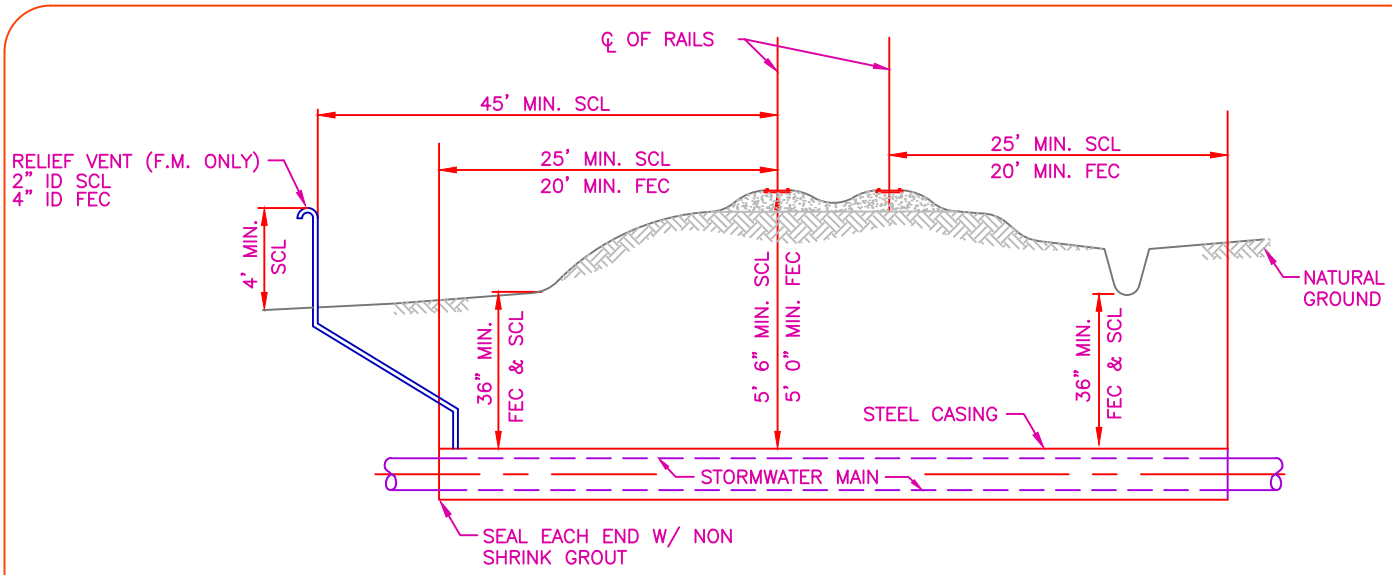

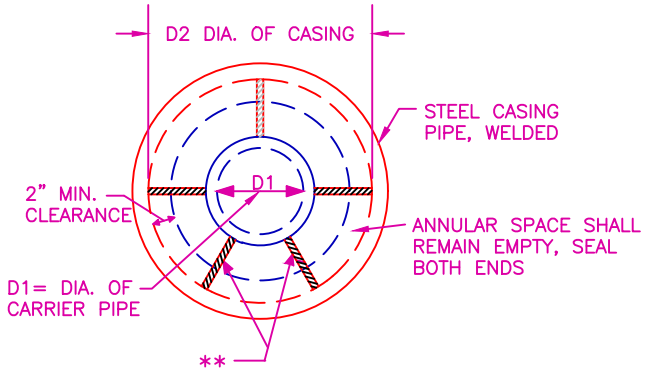

TYPICAL RAILROAD CROSSING

NTS

NOTE TO ENGINEER: CROSSING DETAIL SHALL BE TO SCALE AND SHOW EXISTING UTILITIES, CLEARANCES, CASING LENGTH, LOCATION OF PAVED ROAD AND LIMITS OF RIGHT-OF-WAY

CARRIER PIPE AND CASING PIPE SIZES (MIN.)														
CARRIER PIPE NOM. DIA. (D1)	4	6	8	10	12	14	16	18	20	24	30	36	42	48
CASING PIPE NOM. DIA. (D2)	14	16	18	22	24	30	30	30	36	36	48	54	60	66
WALL THICKNESS-INCHES *	PER AUTHORITY HAVING JURISDICTION													

NOTES:

1. MINIMUM COVER FOR TOP OF CASING TO R/R BASE SHALL BE 5.6' (SCL), 5.0' (FEC). MINIMUM COVER FOR TOP OF CASING ON ALL GROUND COVER SHALL BE 3.0'.
2. ROTATION OF CARRIER PIPE INSIDE THE CASING PIPE WILL NOT BE PERMITTED. RESTRAINED MECHANICAL OR FLANGED JOINT PIPE SHALL BE USED TO HELP PREVENT SUCH ROTATION.
3. SHOP DRAWINGS SHALL BE SUBMITTED OF CASING & CARRIER PIPE INSTALLATION FOR APPROVAL PRIOR TO FABRICATION OF PIPING, CASING, AND APPURTENANCES. CERTIFICATION OF CASING PIPE IS REQUIRED.
4. GROUTING OF SPACE BETWEEN CASING AND CARRIER PIPE NOT REQUIRED UNLESS NEGATIVE FLOTATION EXISTS.
5. WELDING OF CASING PIPE TO BE DONE BY CERTIFIED WELDER. ALL ENDS OF CASING PIPE SHALL BE CHAMFERED PRIOR TO ANY WELDING. SEAL END OF CASING PIPE WITH NON SHRINK GROUT.
6. CITY INSPECTOR SHALL BE PRESENT THROUGHOUT ALL BORE AND JACK ACTIVITIES.

* WITHIN THE CITY OF DAYTONA BEACH RIGHT OF WAY, USE CURRENT FDOT STANDARDS.

** SPECIALLY DESIGNED SPACERS SHALL BE USED IN ACCORDANCE WITH MANUFACTURER'S SPECIFICATIONS. USE CASCADE CASING SPACERS OR PRE-APPROVED EQUAL.

RETURN TO TOC

THE CITY OF DAYTONA BEACH
UTILITIES DEPARTMENT

TYPICAL RAILROAD CROSSING DETAIL
ST-8

FY-15/16	
Drawing Date: 01/08	
Drawn By: KLH	
Checked By: JMP	
Scale: NTS	
Revision Date:	
File Name: Railroad Crossing ST-8	
Page 135	

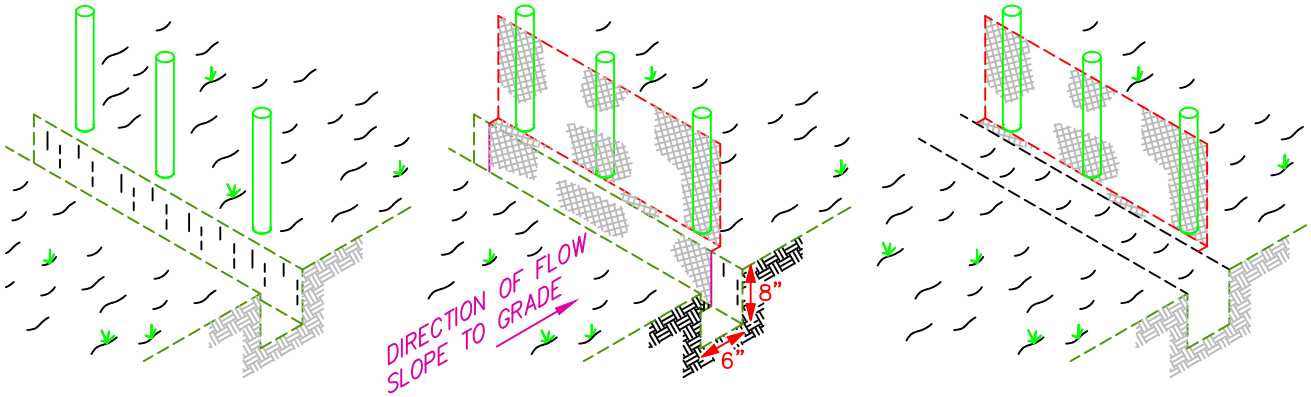

SET POST AND EXCAVATE A TRENCH

ATTACH FILTER FABRIC TO POST ALLOWING 1 FT EXTENSION INTO THE TRENCH AS SHOWN (8" DOWN TRENCH WALL AND 6" ACROSS BOTTOM).

BACKFILL AND COMPACT EXCAVATED SOIL

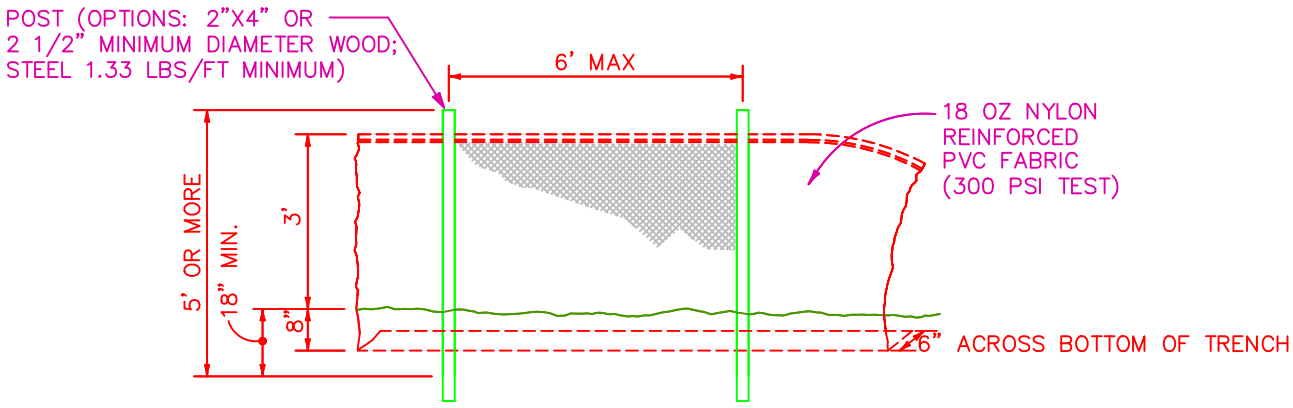

NTS

NOTES:

1. MATERIALS, CONSTRUCTION METHODS AND MAINTENANCE SHALL BE IN ACCORDANCE WITH THE FLORIDA DEPARTMENT OF TRANSPORTATION STANDARD SPECIFICATIONS AND DESIGN STANDARDS CURRENT EDITION.
2. CONTRACTOR SHALL PROVIDE SILT FENCES, TURBIDITY BARRIERS OR APPROVED BARRIERS AT ALL STORMWATER DISCHARGE POINTS FOR EROSION CONTROL AND SEDIMENT CONTROL DURING CONSTRUCTION. DEPENDING UPON FLOW VELOCITIES AND VOLUME, REDUNDANT (MULITPLE) PARALLEL FENCES MAY BE NEEDED.
3. CONTRACTOR SHALL ROUGH GRADE STORMWATER SWALES AND RETENTION AREAS VEGETATING IN COMPLIANCE WITH BEST MANAGEMENT PRACTICES PRIOR TO CONSTRUCTION OF SITE IMPROVEMENTS.
4. CONTRACTOR SHALL MEET ALL PERMIT CONDITIONS AS ESTABLISHED BY THE CITY OF DAYTONA BEACH AND ALL OTHER APPLICABLE AGENCIES, INCLUDING BUT NOT LIMITED TO COUNTY, FDOT, STATE, FEDERAL, AND THE SJRWMD.

RETURN TO TOC

THE CITY OF DAYTONA BEACH
ENGINEERING DIVISION

STAKED SILT FENCE DETAIL
ST-9

FY- 15/16	
Drawing Date:	01/08
Drawn By:	KLH
Checked By:	JMP
Scale:	NTS
Revision Date:	
File Name:	Silt Fence ST-9
Page 136	

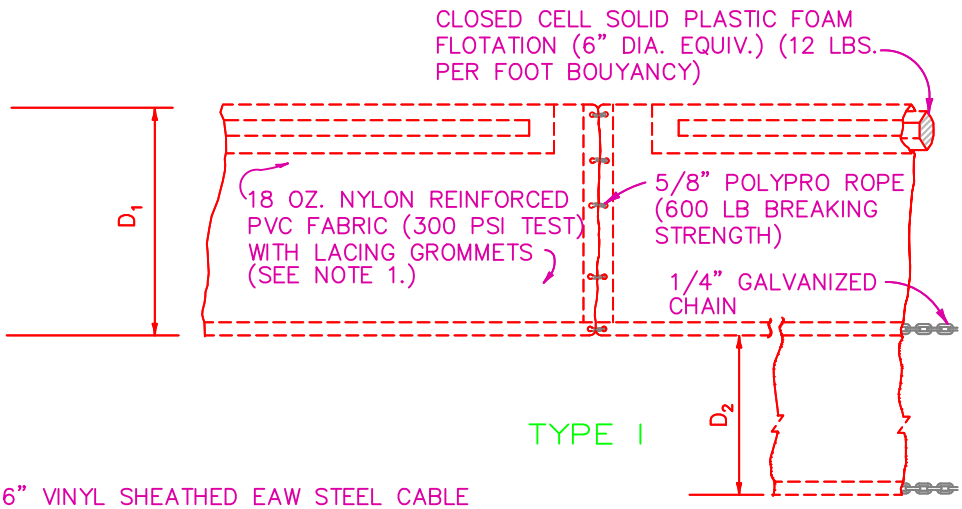

TYPE I

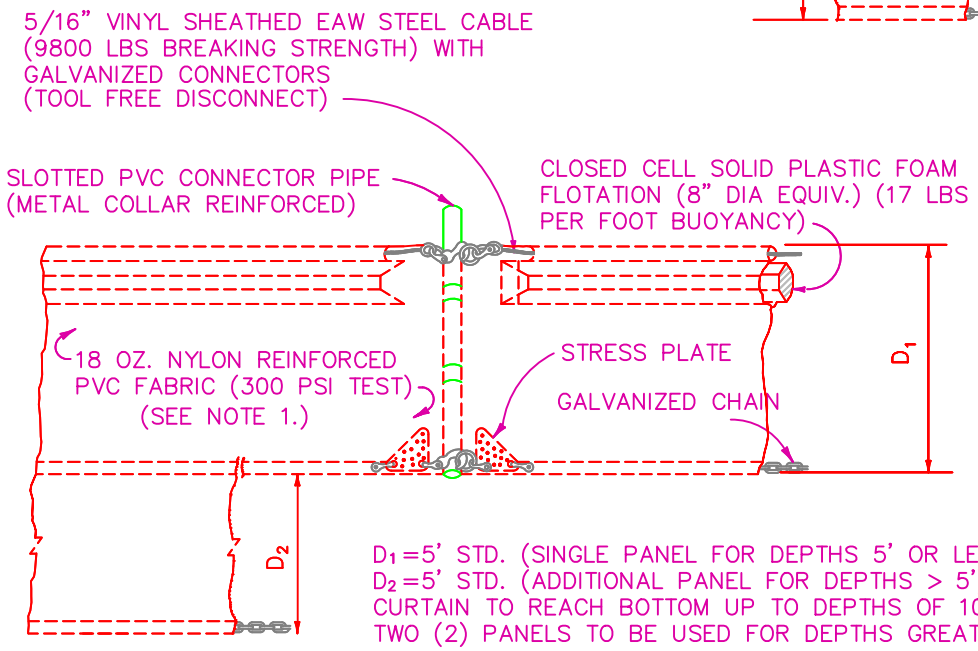

D_1 = 5' STD. (SINGLE PANEL FOR DEPTHS 5' OR LESS)
D_2 = 5' STD. (ADDITIONAL PANEL FOR DEPTHS > 5')
CURTAIN TO REACH BOTTOM UP TO DEPTHS OF 10 FEET.
TWO (2) PANELS TO BE USED FOR DEPTHS GREATER THAN 10 FEET UNLESS SPECIAL DEPTH CURTAINS SPECIFICALLY CALLED FOR IN THE PLANS OR AS DETERMINED BY THE ENGINEER.

TYPE II

NOTE:

1. USE 18 OZ. NYLON REINFORCED PVC FABRIC FOR STANDING WATER. USE FILTER FABRIC FOR FLOWING WATER.

NOTICE:

COMPONENTS OF TYPES I AND II MAY BE SIMILAR OR IDENTICAL TO PROPRIETARY DESIGNS. ANY INFRINGEMENT ON THE PROPRIETARY RIGHTS OF THE DESIGNER SHALL BE THE SOLE RESPONSIBILITY OF THE USER. SUBSTITUTIONS FOR TYPES I AND II SHALL BE AS APPROVED BY THE ENGINEER.

RETURN TO TOC

THE CITY OF DAYTONA BEACH
ENGINEERING DIVISION

FLOATING TURBIDITY BARRIER DETAIL
ST-10

FY-15/16	
Drawing Date:	01/08
Drawn By:	KLH
Checked By:	JMP
Scale:	NTS
Revision Date:	
File Name:	Floating Turbidity Barrier ST-10

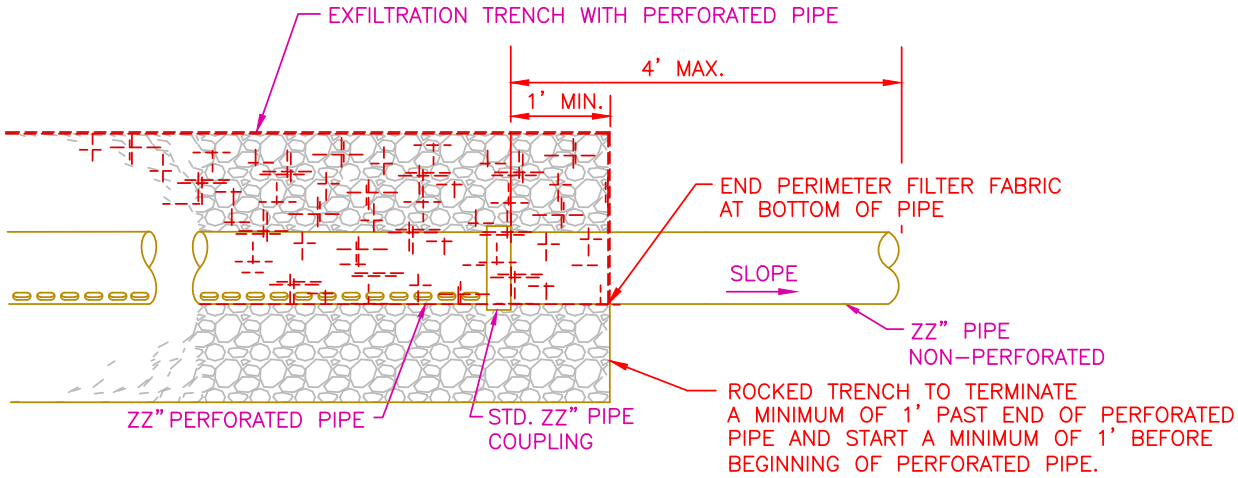

PERFORATED / SOLID PIPE TRANSITION

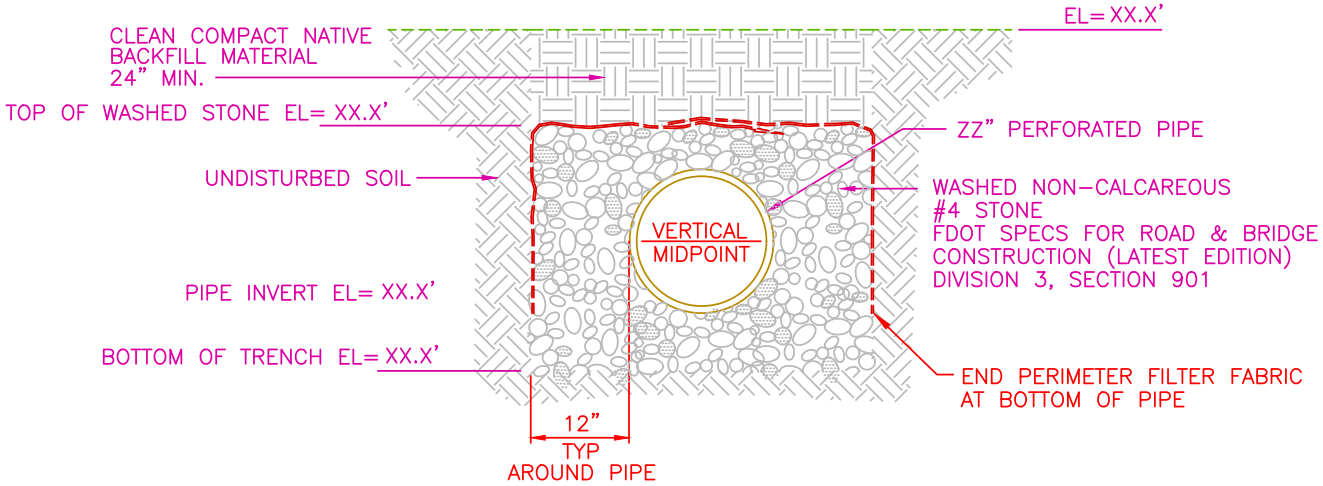

NOTE:

SLOTTED PIPE NOT IN EXFILTRATION TRENCH TO BE WRAPPED WITH FILTER FABRIC PER FDOT SPECIFICATIONS WITH A MINIMUM 12" OVERLAP.

NARROW WIDTH OF EXFILTRATION TRENCH AS NEEDED TO INSTALL TRENCH ADJACENT TO UTILITY POLES & REMAINING TREES. NOTIFY UTILITY OWNER A MINIMUM OF 4 WORKING DAYS PRIOR TO TRENCHING ADJACENT TO UTILITY POLES OR OTHER UTILITIES REQUIRING NARROWING OF EXFILTRATION TRENCH.

IF EXFILTRATION TRENCH IS TOO NARROW OR CONSTRAINED AND IS CONSTRUCTED WITHOUT PIPE THE ENTIRE TRENCH PERIMETER WILL BE WRAPPED WITH FILTER FABRIC.

LEGEND:
ZZ = DIAMETER PIPE
XX.X = ELEVATION VALUE

RETURN TO TOC

THE CITY OF DAYTONA BEACH
ENGINEERING DIVISION

EXFILTRATION TRENCH DETAIL ST-11

FY- 15/16	
Drawing Date: 01/08	
Drawn By: KLH	
Checked By: JMP	
Scale: NTS	
Revision Date:	
File Name: Exfiltration Trench ST-11	
Page 138	

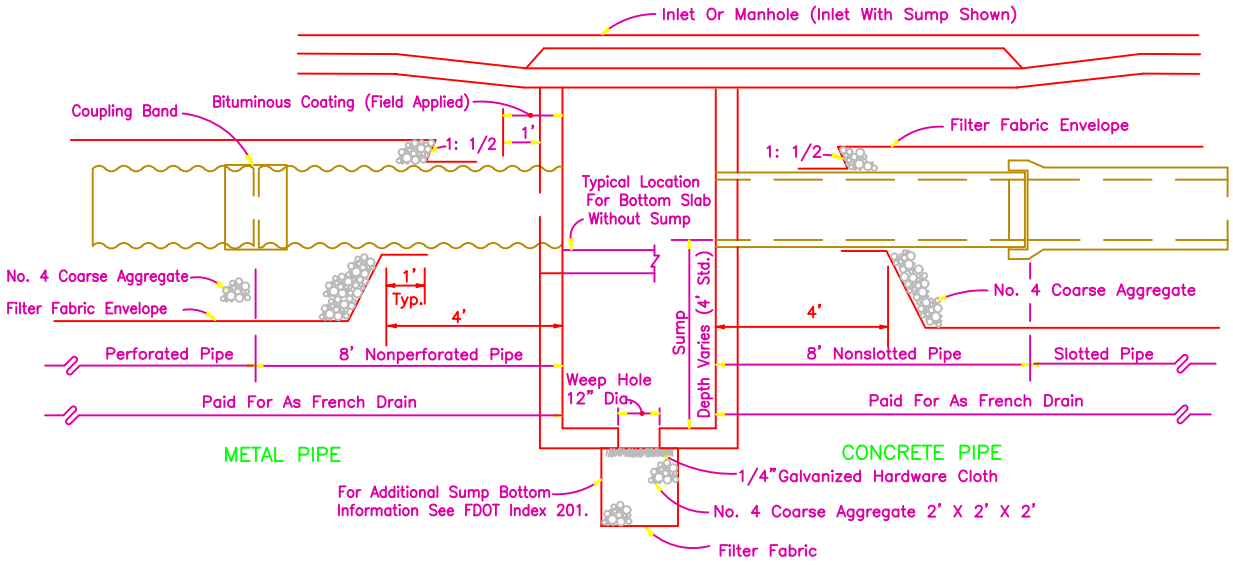

LONGITUDINAL SECTION

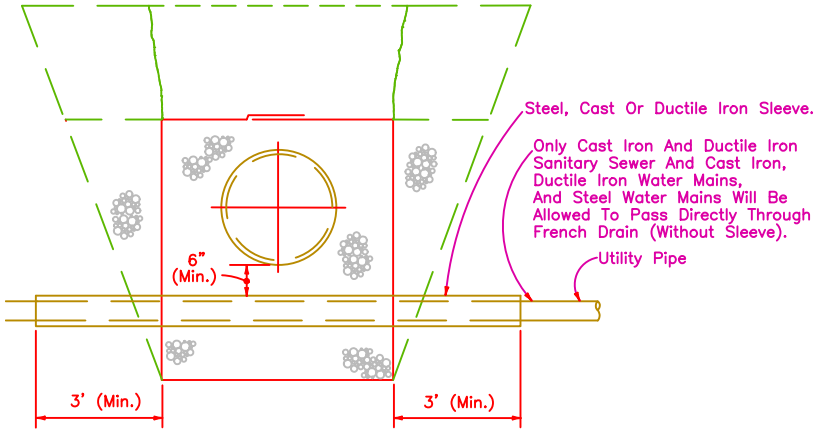

ROUND PIPE SHOWN

UTILIITY PIPES THRU FRENCH DRAIN

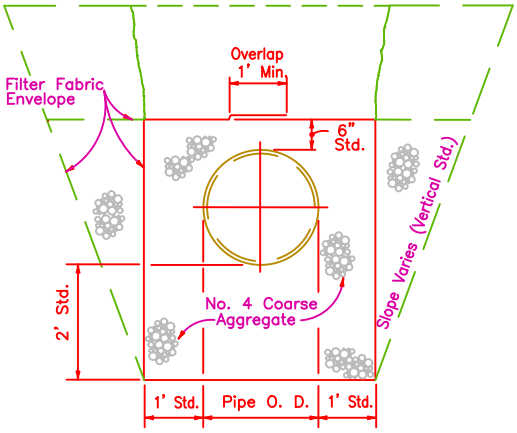

ROUND PIPE SHOWN

STANDARD CROSS SECTION (ENLARGED)

RETURN TO TOC

THE CITY OF DAYTONA BEACH
ENGINEERING DIVISION

FRENCH DRAIN SYSTEM DETAIL (PAGE 1 OF 2) ST-12

FY- 15/16
Drawing Date: 01/08
Drawn By: KLH
Checked By: JMP
Scale: NTS
Revision Date:
File Name: French Drain ST-12
Page 139

FRENCH DRAIN SYSTEM

GENERAL NOTES

1. PIPE SHALL BE ANY OF THE OPTIONAL TYPES PERMITTED IN SECTION 443 OF THE STANDARD SPECIFICATIONS FOR ROAD AND BRIDGE CONSTRUCTION, 2000 EDITION, UNLESS OTHERWISE RESTRICTED IN THE PLANS. DISSIMILAR TYPES OF PIPE WILL NOT BE PERMITTED IN A CONTINUOUS RUN OF PIPE.
2. CONCRETE PIPE SHALL BE PLACED WITH THE SLOTS POSITIONED ON SIDES.
3. ALIGNMENT JOINTS ARE STANDARD (GASKETS NOT REQUIRED). RECORRUGATION OF METAL PIPE ENDS NOT REQUIRED.
4. PRIOR TO CONSTRUCTION BEGINNING THE CONTRACTOR MAY SUBMIT OTHER METHODS OF PROVIDING SLOTS HAVING EQUAL OR GREATER AREA OF OPENING, FOR APPROVAL BY THE ENGINEER.
5. FILTER FABRIC SHALL BE SUBSURFACE DRAINAGE TYPE MEETING THE REQUIREMENTS OF SECTION 985 OF THE STANDARD SPECIFICATIONS FOR ROAD AND BRIDGE CONSTRUCTION, 2000 EDITION. ALL FILTER FABRIC JOINTS SHALL LAP A MINIMUM OF ONE (1) FOOT.
6. THE STANDARD CROSS SECTION SHALL BE CONSTRUCTED UNLESS OTHER SECTION(S) DESCRIBED OR DETAILED IN THE PLANS.
7. FOR SUPPLEMENTAL DETAILS SEE FDOT INDEX NO. 280.
8. THE CONTRACTOR SHALL TAKE THE NECESSARY PRECAUTIONS TO PREVENT CONTAMINATION OF THE TRENCH WITH SAND, SILT AND FOREIGN MATERIALS.
9. THE 12" DIAMETER WEEP HOLE SHALL BE ELIMINATED, WHEN THE BOTTOM OF THE INLET IS BELOW THE NORMAL WATER TABLE, UNLESS OTHERWISE SHOWN IN THE PLANS.

DESIGN NOTES

1. PIPE INVERT SHOULD BE AT OR ABOVE THE NORMAL WATER TABLE WHENEVER POSSIBLE.
2. FRENCH DRAINS WITH MINOR DIMENSIONAL CHANGES OR OTHERWISE DIFFERENT FROM THE STANDARD CROSS-SECTION SHALL BE EITHER DESCRIBED OR DETAILED IN THE PLANS. FRENCH DRAINS WITH SIGNIFICANTLY DIFFERENT CROSS-SECTIONS SHALL BE DETAILED IN THE PLANS.

RETURN TO TOC

NOTE: TO DETERMINE THE MOST CURRENT REQUIREMENTS FOR STABILIZATION MATERIAL, BASE MATERIAL, AND ASPHALT MATERIAL PATCH AND THE REPLACEMENT DIMENSIONS CONTACT CITY ENGINEER IN THE PUBLIC WORKS DEPT AT 386-671-8610.

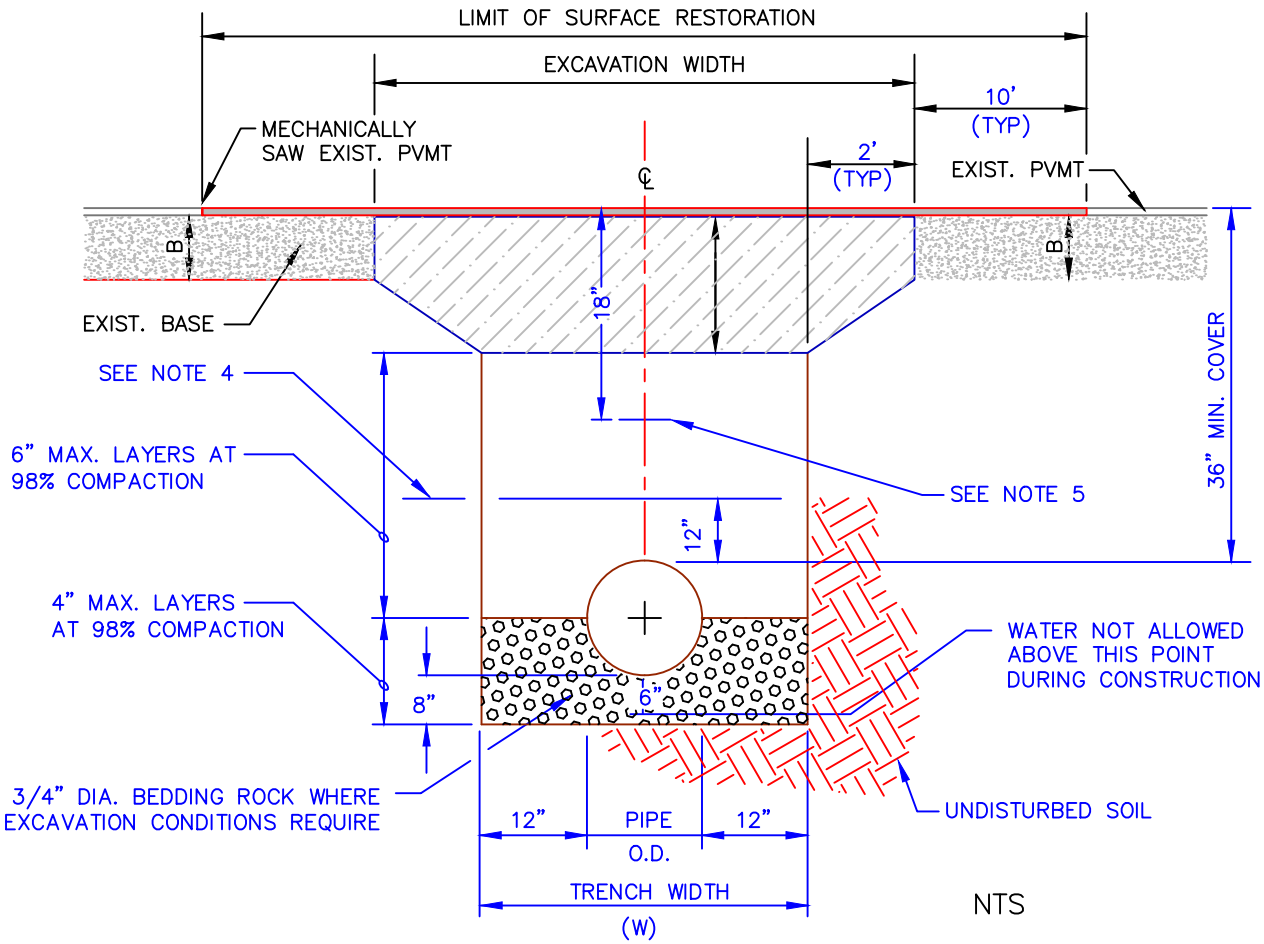

NTS

NOTES:

1. WHERE SOIL CONDITIONS CAN NOT BE MAINTAINED AS SHOWN ABOVE, PROVIDE APPROVED METHOD OF CONSTRUCTION.
2. SHEETING WILL BE REQUIRED AS DETERMINED IN THE FIELD.
3. COMPACTION PERCENTAGES SHOWN REFER TO A.A.S.H.T.O. T-180. PROVIDE COMPACTION TEST REPORTS TO CITY INSPECTOR.
4. MECHANICAL COMPACTION NOT ALLOWED BELOW THIS LEVEL.
5. FOR PVC PIPE ONLY - INSTALL METALLIC TAPE AND UF #12 INSULATED SINGLE STRAND COPPER WIRE OVER FULL LENGTH OF PIPE.
6. THE CONTRACTOR SHALL, UNLESS OTHERWISE NOTED, RESTORE ALL STRIPING, PAVEMENT MARKINGS, DELINEATORS, SIGNAGE AND TRAFFIC SIGNAL SYSTEM COMPONENTS DISTURBED DURING CONSTRUCTION ACTIVITIES. COST OF ALL WORK AND MATERIALS WILL BE CONSIDERED INCIDENTAL TO PATCH MATERIAL ITEMS.

RETURN TO TOC

THE CITY OF DAYTONA BEACH
UTILITIES DEPARTMENT

PAVEMENT CUT AND PATCH DETAIL ST-14

FY-15/16	
Drawing Date: 01/08	
Drawn By: KLH	
Checked By: JMP	
Scale: NTS	
Revision Date: 05/13	
File Name: Pavement Cut & Patch ST-14	

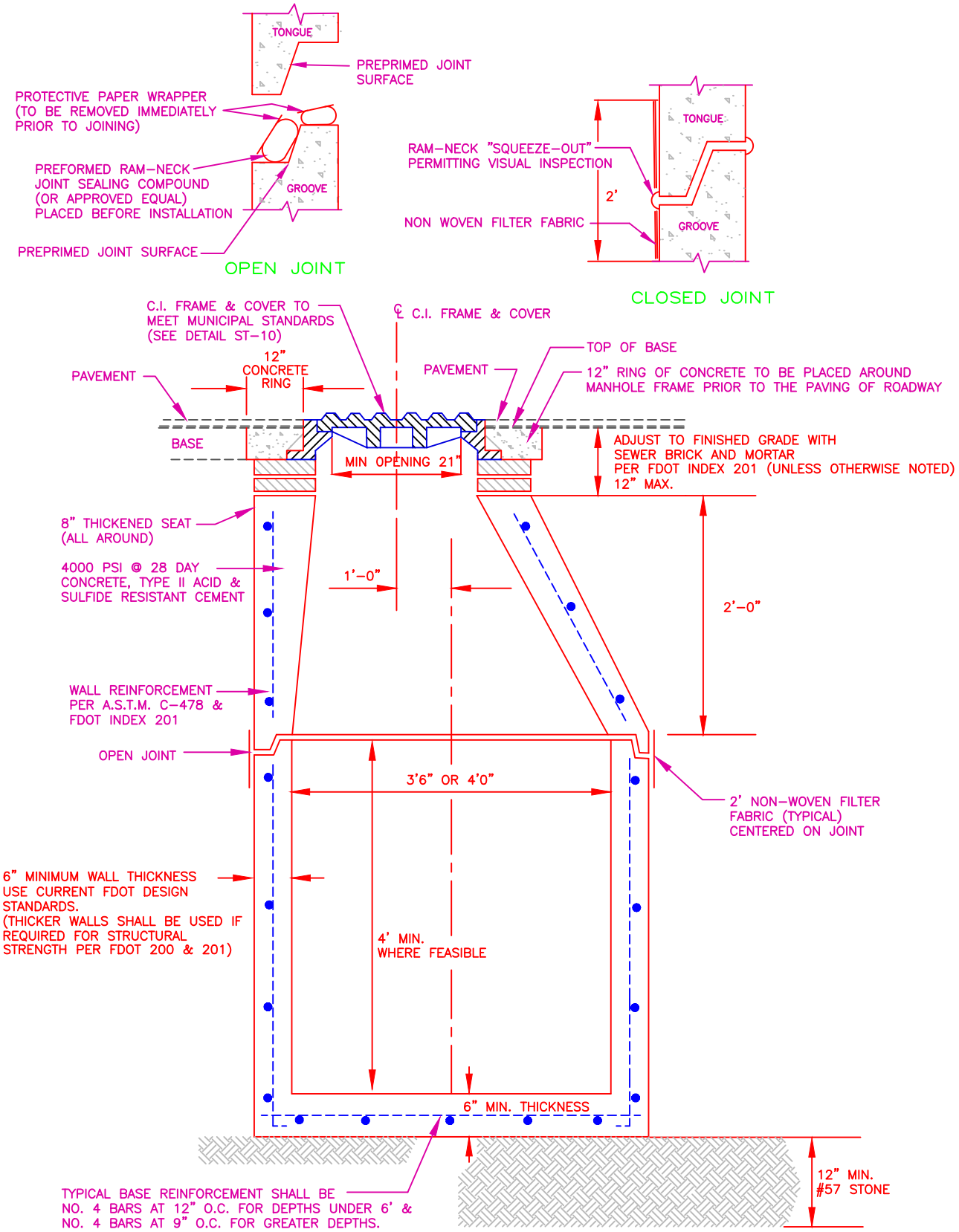

RETURN TO TOC

THE CITY OF DAYTONA BEACH
ENGINEERING DIVISION

STORMWATER MANHOLE DETAIL ST-15

FY- 15/16
Drawing Date: 01/08
Drawn By: KLH
Checked By: JMP
Scale: NTS
Revision Date: 08/10
File Name: Manhole ST-15
Page 142

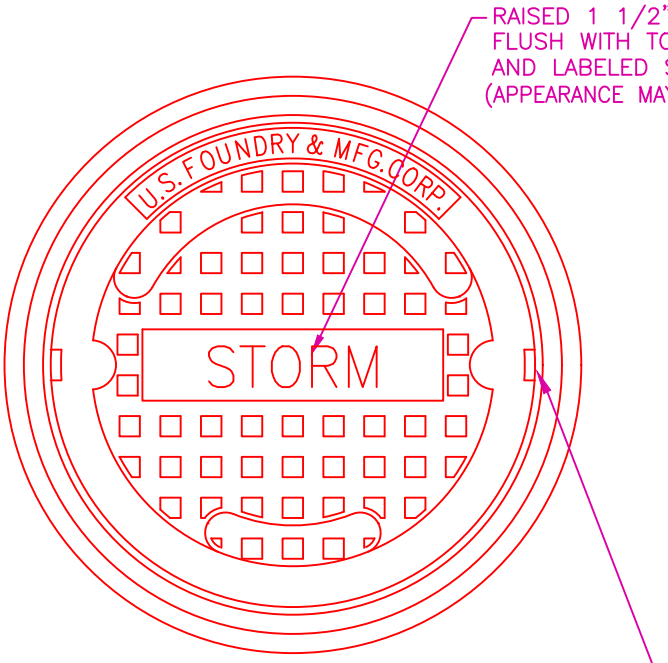

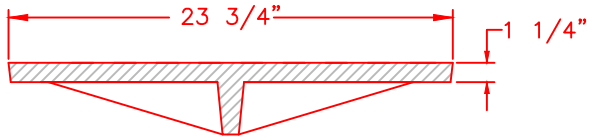

USF TYPE E MANHOLE COVER

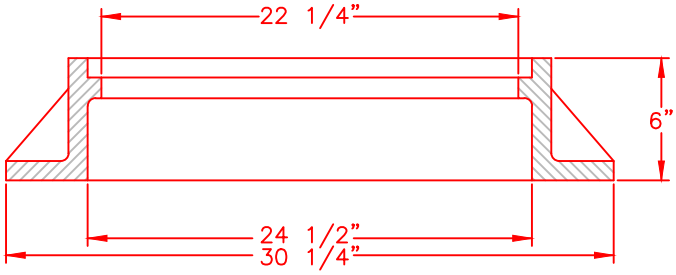

USF 170 MANHOLE RING

NOTES:

1. MORTAR TO CONTAIN "HYDRATITE", OR APPROVED EQUAL, TO PREVENT SHRINKAGE.
2. SUB-GRADE BENEATH MANHOLES SHALL BE FIRM UNDISTURBED GRANULAR UNSATURATED SOIL. No. 57 AGGREGATE STONE SHALL BE USED IN WET CONDITIONS AND/OR WHERE UNSUITABLE MATERIAL IS ENCOUNTERED.
3. UNLESS DETAILED PLANS SHOW OTHERWISE, ALL MANHOLE RING AND COVER CASTINGS IN PAVED AREAS ARE TO BE ADJUSTED TO FINAL GRADE, SEALED AND SECURED IN PLACE WITH A CONCRETE COLLAR AFTER THE ROAD BASE IS PLACED AND JUST PRIOR TO PLACEMENT OF ASHPALT WEARING SURFACE.
4. CONTRACTOR SHALL PROVIDE THICKER MANHOLE WALLS AND BASES AS REQUIRED TO PREVENT FLOTATION BASED ON HISTORIC HIGH GROUND WATER TABLE ELEVATIONS AS DETERMINED USING ACCEPTED ENGINEERING PRACTICES AND/OR APPROVED BY THE UTILITIES DEPARTMENT.
5. CONCRETE COLLAR AROUND MANHOLE FRAME IS REQUIRED IN PAVED AREAS ONLY.
6. SHOP DRAWINGS FOR ALL STRUCTURES SHALL BE SUBMITTED TO AND APPROVED BY THE DESIGN ENGINEER PRIOR TO INSTALLATION.
7. NO BUG HOLES OR HONEYCOMB WILL BE ACCEPTED.
8. ENDS OF SECTION SHALL FIT FLUSH TOGETHER
9. MANHOLES SHALL BE CLEARED OF ALL DEBRIS PRIOR TO CITY ACCEPTANCE AND SYSTEM USE.

RETURN TO TOC

THE CITY OF DAYTONA BEACH
ENGINEERING DIVISION

STORM-SEWER
COVER DETAIL & MH
GENERAL NOTES
ST-16

FY- 15/16	
Drawing Date: 01/08	
Drawn By: KLH	
Checked By: JMP	
Scale: NTS	
Revision Date:	
File Name: Storm Cover ST-16	
Page 143	

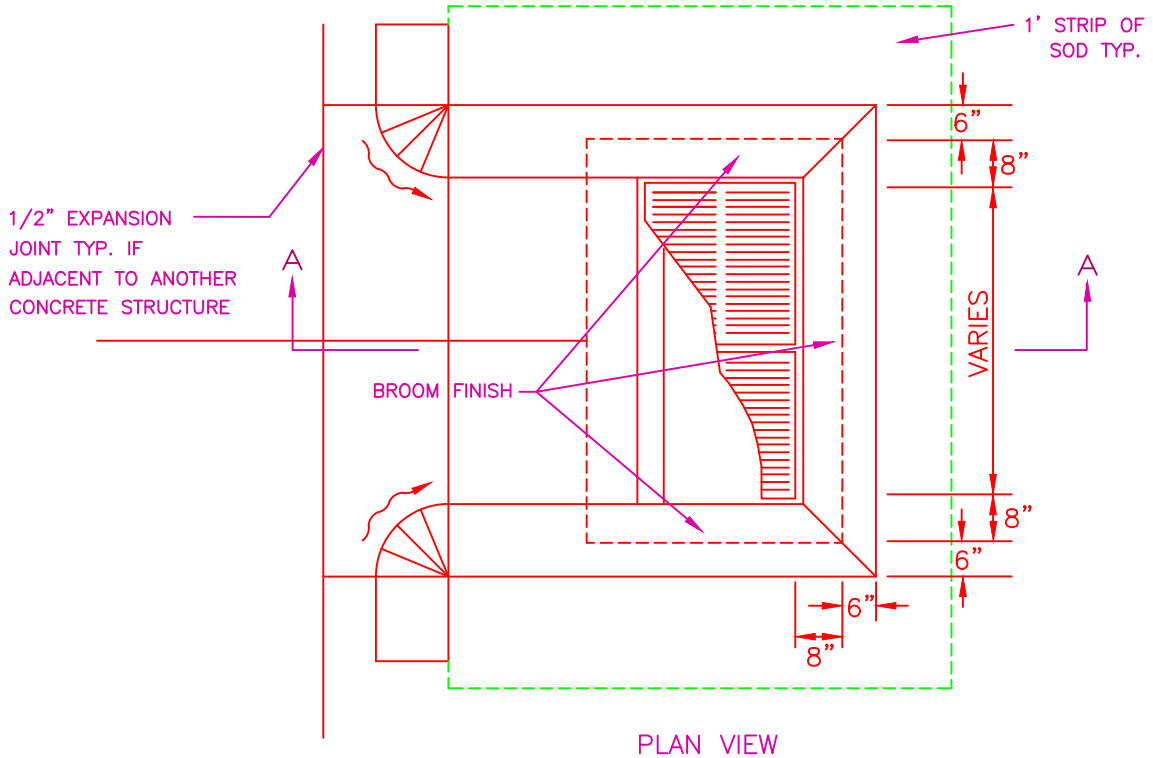

PLAN VIEW

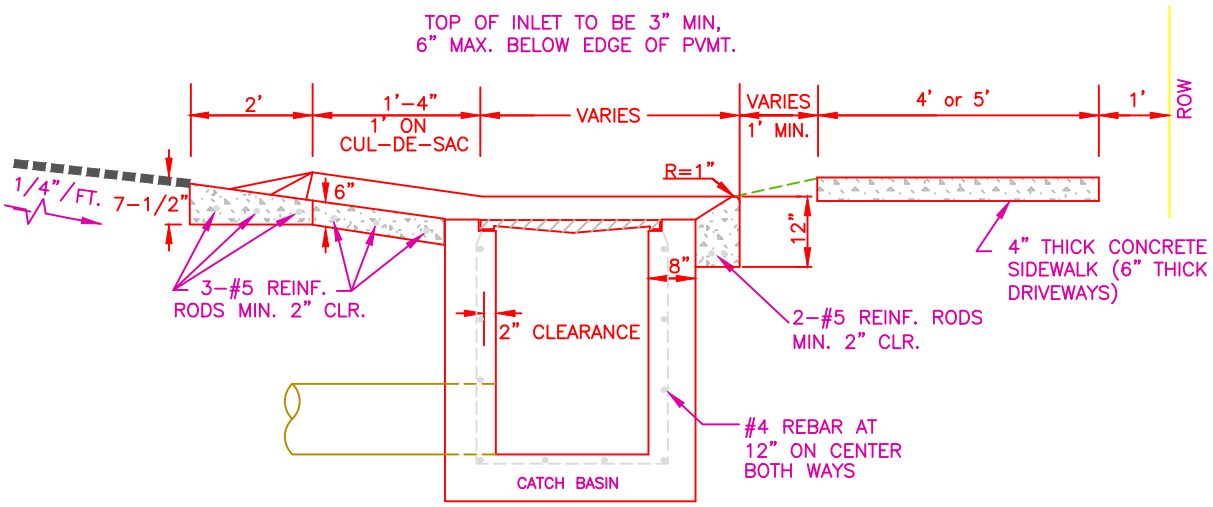

SECTION A-A

NTS

DIMENSIONS SHOWN ARE MINIMUM. FDOT 2010 STANDARDS SHALL APPLY

RETURN TO TOC

THE CITY OF DAYTONA BEACH
ENGINEERING DIVISION

CONCRETE STORM INLET & APRON DETAIL
ST-17

FY- 15/16
Drawing Date: 01/08
Drawn By: KLH
Checked By: JMP
Scale: NTS
Revision Date:
File Name: Storm Inlet ST-17
Page 144

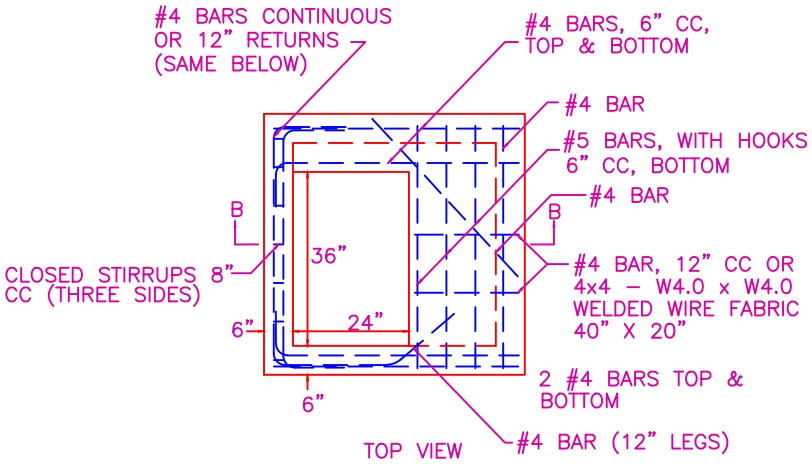

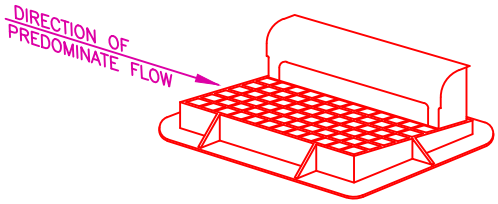

USF 5129, INLET FRAME & HOOD
USF 6176, HINGED GRATE

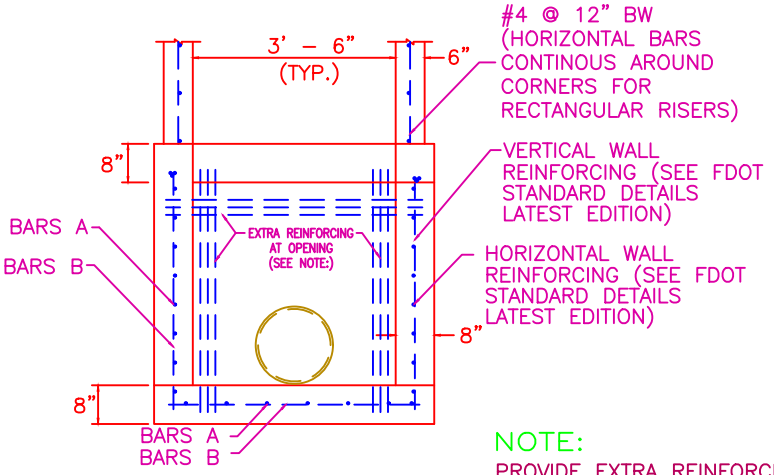

TYPE P
ALTERNATE B

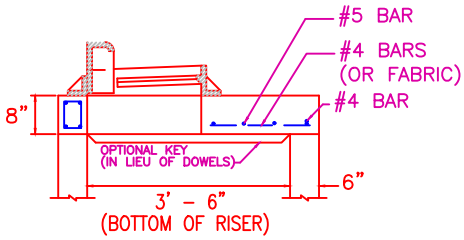

SECTION "B–B"

CURB INLET TOP
TYPE 9

NOTE:

PROVIDE EXTRA REINFORCING EACH SIDE OF EACH OPENING AT 3" MAXIMUM SPACING EQUAL TO HALF THE AREA OF VERTICAL REINFORCMENT REMOVED BY THE OPENING AND PROVIDE THE SAME AREA OF REINFORCMENT ABOVE EACH OPENING AT 3" MAXIMUM SPACING AS REMOVED BY THE OPENING.

RETURN TO TOC

THE CITY OF DAYTONA BEACH
ENGINEERING DIVISION

UNDER CURB/GUTTER
CATCH BASIN
DETAIL
ST–18

FY–15/16	
Drawing Date:	01/08
Drawn By:	KLH
Checked By:	JMP
Scale:	NTS
Revision Date:	
File Name:	Catch Basin ST–18
Page	145

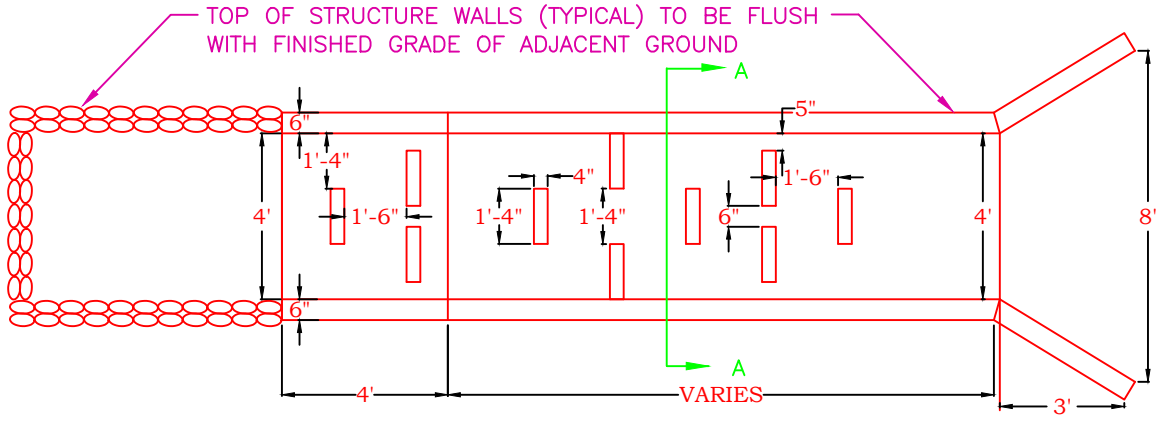

PLAN VIEW

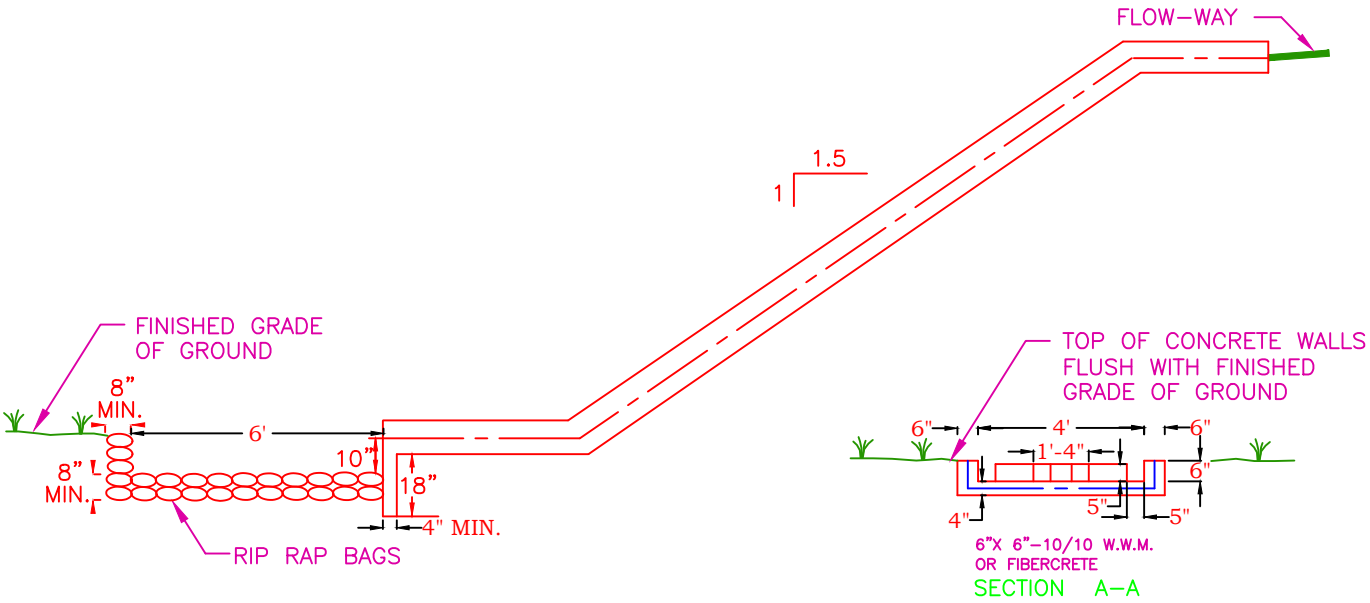

PROFILE VIEW

NOTES:

1. CONCRETE SPILLWAY TO BE 28 DAY, 3000 P.S.I., 4" THICK (MIN).
2. PLACE SOD AT LEAST 5' IN BORDER WIDTH AROUND ALL STRUCTURE EDGES ABOVE STANDING WATER.

RETURN TO TOC

THE CITY OF DAYTONA BEACH
ENGINEERING DIVISION

CONCRETE
SPILLWAY
DETAIL
ST-19

FY-15/16	
Drawing Date: 01/08	
Drawn By: KLH	
Checked By: JMP	
Scale: NTS	
Revision Date:	
File Name:	Concrete Spillway ST-19

DIMENSIONS & QUANTITIES

D	X	A	B	C	E	F	G	M Single Pipe	M Double Pipe	M Triple Pipe	M Quad Pipe	N
15"	2'-7"	2.27'	4.09'	6.36'	4.03'	8'	1.22'	4.63'	7.21'	9.79'	12.37'	1.19'
18"	2'-10"	2.36'	5.12'	7.48'	5.03'	9'	1.41'	4.92'	7.75'	10.58'	13.42'	1.21'
24"	3'-5"	2.53'	7.18'△	9.71'	7.03'△	11'	1.73'	5.50'	8.92'	12.33'	15.75'	1.25'
30"	4'-3"	2.70'	9.25'	11.95'	9.03'	13'	2.00'	6.08'	10.33'	14.58'	18.83'	1.29'
36"	5'-1"	2.87'	11.31'◇	14.18'	11.03'◇	15'	2.24'	6.67'	11.75'	16.83'	21.92'	1.33'
42"	6'-0"	3.05'	13.37'	16.42'	13.03'	17'	2.45'	7.25'	13.25'	19.25'	25.25'	1.38'
48"	6'-9"	3.22'	15.43'	18.65'	15.03'	19'	2.65'	7.83'	14.58'	21.33'	28.08'	1.42'
54"	7'-8"	3.39'	17.49'	20.88'	17.03'	21'	2.83'	8.42'	16.08'	23.75'	31.42'	1.46'
60"	8'-6"	3.56'	19.55'	23.11'	19.03'	23'	3.00'	9.00'	17.50'	26.00'	34.50'	1.50'

D	GRATE SIZES Standard Weight Pipe	GRATE SIZES Extra StrongPipe	CONCRETE (Cu. Yds.) Single Pipe	CONCRETE Double Pipe	CONCRETE Triple Pipe	CONCRETE Quad Pipe	SODDING (Sq. Yds.) Single Pipe	SODDING Double Pipe	SODDING Triple Pipe	SODDING Quad Pipe
15"			0.81	1.23	1.64	2.06	8	10	11	12
18"			0.90	1.36	1.82	2.30	9	10	12	13
24"			1.08	1.67	2.27	2.91	10	12	13	15
30"		3"	1.29	2.08	2.89	3.69	12	14	15	17
36"		3"	1.47	2.50	3.50	4.46	13	15	17	20
42"			1.67	2.96	4.23	5.51	14	17	19	22
48"			1.89	3.41	4.91	6.42	15	18	21	24
54"	3"	4"	2.11	3.94	5.78	7.59	17	20	23	27
60"	3"	4"	2.37	4.54	6.69	8.85	18	22	25	29

△ 6.42' △ 6.25' Dimensions permitted to allow use of 8' standard pipe lengths.
◇ 10.40' ◇ 10.10' Dimensions permitted to allow use of 12' standard pipe lengths.
△ ◇ Concrete slab shall be deepened to form bridge across crown of pipe. See section below.

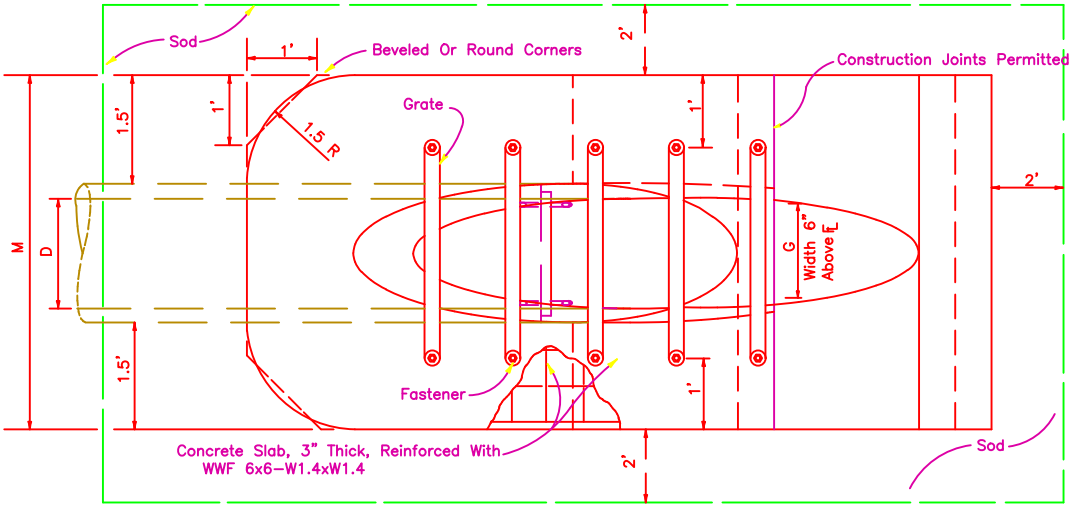

TOP-VIEW SINGLE PIPE

NOTES:

1. SEE SHEETS ST-1A THRU ST-1D OF DAYTONA BEACH STORM INDEX FOR GENERAL NOTES.
2. ROUND PIPE SIZES 30" AND GREATER AND ELLIPTICAL PIPE 19"X30" AND GREATER SHALL BE GRATED UNLESS OTHERWISE NOTED ON THE PLANS.

*Slope:
To Major Axis For Pipes 24" x 38" And Smaller
1:2 For Pipes 29" x 45" And Smaller

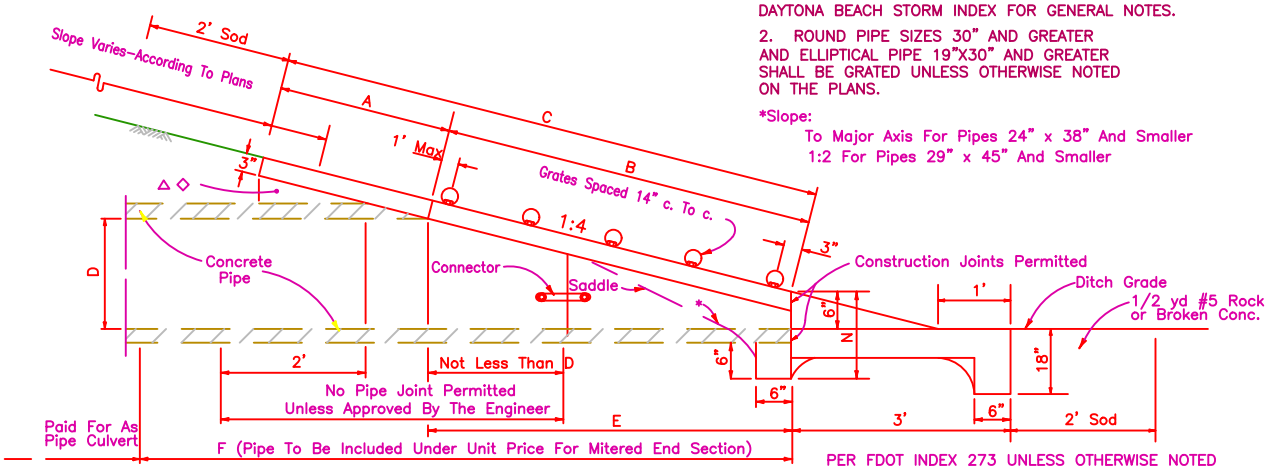

PER FDOT INDEX 273 UNLESS OTHERWISE NOTED

SECTION

RETURN TO TOC

THE CITY OF DAYTONA BEACH
ENGINEERING DIVISION

MITERED END SECTION DETAIL (SINGLE PIPE)
ST-20

FY-15/16
Drawing Date: 01/08
Drawn By: KLH
Checked By: JMP
Scale: NTS
Revision Date:
File Name: Mitered End ST-20
Page 147

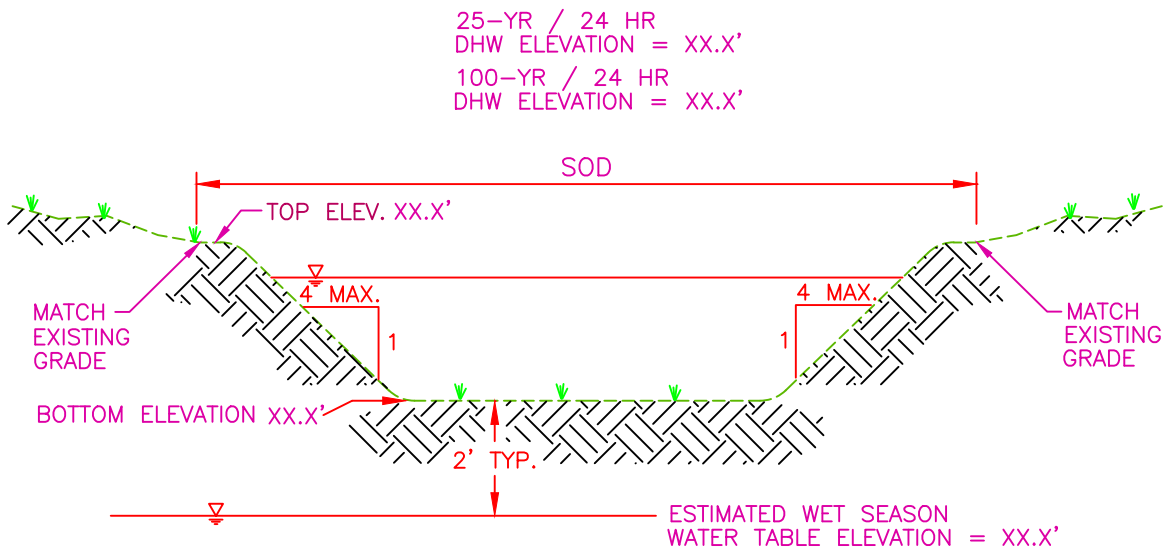

CROSS SECTIONAL VIEW

NOTES:

1. EXTEND LIMITS OF SODDING TO A MINIMUM OF TWO (2') BEYOND TOP OF BANK OR TO MATCH EXISTING GRADE, WHICHEVER IS GREATER.
2. ESTIMATED WET SEASON WATER TABLE ELEVATION SHALL BE BASED UPON A SITE SPECIFIC GEOTECHNICAL SOIL BORING AND PROFESSIONAL ANALYSIS.

RETURN TO TOC

THE CITY OF DAYTONA BEACH
ENGINEERING DIVISION

DRY POND
CROSS SECTION
DETAIL
ST-21

FY-15/16
Drawing Date: 01/08
Drawn By: KLH
Checked By: JMP
Scale: NTS
Revision Date:
File Name: Dry Pond ST-21
Page 148

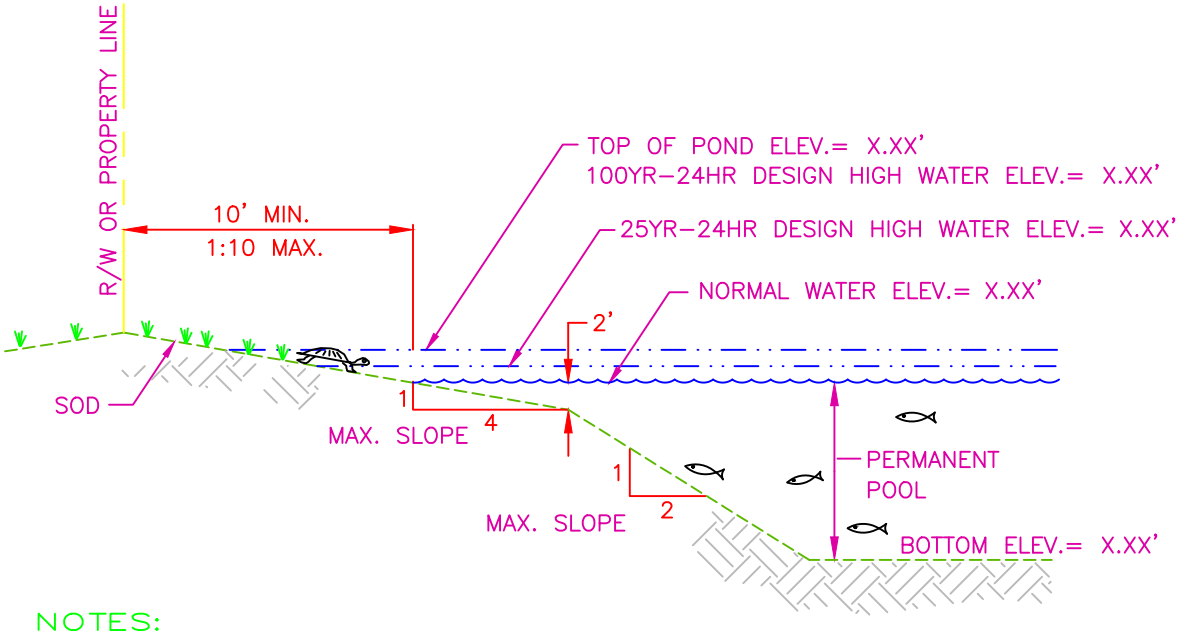

NOTES:

1. SOD IS TO BE PLACED TO EDGE OF WATER EXCEPT IN LITTORAL PLANTING AREAS.
2. A MINIMUM OF ONE FOOT OF FREEBOARD IS REQUIRED BETWEEN 100 YR-24 HR DESIGN HIGH WATER ELEVATION AND TOP OF BANK.
3. EXTEND LIMITS OF SODDING TO A MINIMUM OF TWO (2') BEYOND TOP OF BANK OR MATCH EXISTING GRADE, WHICHEVER IS GREATER.
4. PERMANENT POOL DEPTH & VOLUME SHALL MEET THE REQUIREMENTS OF THE SJRWMD.

NTS

RETURN TO TOC

THE CITY OF DAYTONA BEACH
ENGINEERING DIVISION

WET POND
CROSS SECTION
DETAIL
ST-22

FY- 15/16	
Drawing Date: 01/08	
Drawn By: KLH	
Checked By: JMP	
Scale: NTS	
Revision Date:	
File Name: Wet Pond ST-22	
Page 149	

Section 01720
AS-BUILTS/RECORD DOCUMENTS

PART 1 - GENERAL

1.1 SCOPE OF WORK

A. This Section sets forth the requirements for preparing as-built/record drawings and documents for verification of construction and archiving.

CONTRACTOR shall secure the services of a Florida licensed surveyor to collect data and prepare as-built/record drawings in accordance with City of Daytona Beach Utilities standards as follows:

1.2 REFERENCE:

A. The preparation work shall be in accordance with this section and supplementary details in the City of Daytona Beach Utilities Department Standard Details, latest edition.

1.3 AS-BUILTS/RECORD DRAWINGS AND DOCUMENTS:

In order to ensure that the project records are maintained to the highest standards and the information can easily be added to the City's electronic records the following information is required on all As-built/Record Drawings.

A. The intent of these details for As-built/Record Drawings are required for all public facilities constructed. Prior to construction completion these as-built/record requirements will be reviewed to be certain the Contractor's surveyor has a clear understanding of what is required for completion of this work.

1. Pavement and curb widths shall be verified and dimensioned for each street at each block (for subdivisions) and as appropriate to confirm paving limits (on site plans).
2. All radii at intersections shall be verified and dimensioned. This information is to be clearly indicated on the as-built/record drawings.

Section 01720
AS-BUILTS/RECORD DOCUMENTS
(CONT'D)

3. Roadway elevation shall be recorded at all grade changes, 100' intervals along roadway, and other intervals as needed along all streets. Street centerline and curb invert elevations shall be recorded as noted. The as-built centerline profile of all streets shall also be shown on the plan and profile so it may be compared to the design profile grade lines. In the event that the as-built centerline longitudinal grade does not meet the City minimum standards, additional longitudinal grades of the adjacent curbing and similar roadway cross-section surveys to verify the correct cross slope, shall be required to verify that the system will function as originally designed.
4. Storm drainage structures shall be located and/or dimensioned from centerlines or lot lines as appropriate. Each structure shall be located by sub-meter GPS with Station & Offset, northerly & easterly, latitude, longitude, and elevation data.
5. Storm drainage pipe invert and inlet elevation shall be recorded and clearly denoted as As-built information. Design elevation shall be crossed out and as-built information written next to it.
6. Storm drainage pipe material, length, size shall be measured and/or verified. This information is to be clearly indicated as being as-built information.
7. All applicable topographic information pertinent to the on-site drainage system, such as ditches, swales, lakes, canals, etc. that are deemed necessary by the City to verify the functional performance of the storm system, shall be noted. Normally, recording elevation every 100 feet at the top of bank to toe of sloe will be required. Measurements shall be taken and recorded in order to accurately tie down these features to the roadway centerlines and to plat lines. Whenever possible, contour lines shall be utilized to graphically describe these topographic features.
8. Retention areas shall have their top of bank and bottom elevations recorded. Actual measurements shall be taken and dimensions recorded of the size of all retention areas. Measurements shall be done from top of bank with side slopes indicated. Separate calculations shall be submitted to indicate required and provided retention volumes.
9. Actual materials used and elevations and dimensions of overflow weir structures and skimmers shall be noted on the as-built.
10. Storm drainage swale centerlines shall be located and elevations of flow line and top of bank shall be recorded every 100 feet. side slopes shall also be indicated.

Section 01720
AS-BUILTS/RECORD DOCUMENTS
(CONT'D)

11. Sanitary sewer manholes shall be verified and dimensioned from street centerlines or lot lines as appropriate. Each structure shall be located by sub-meter GPS with station & offset, northerly & easterly, latitude, longitude, and elevation data. All rim and invert elevation shall be verified and recorded. This information shall be clearly indicated as being as-built information. Design elevations shall be crossed out and as-built information written next to it.
12. For subdivisions, proposed design finish floor elevations shall appear on all subdivision lots on the appropriate plan and profile sheet as well as on the master drainage plan.
13. Sanitary sewer line lengths, sizes, material, slope, etc., shall be verified and recorded, this information is to be clearly indicated as being as-built information.
14. Sewer Laterals shall be verified and recorded at the clean out locations, stationing and offset distances shall be measured from upstream manholes towards downstream manholes. Invert information at clean out shall be provided and be located by sub-meter GPS with station & offset, northerly & easterly, latitude, longitude, and elevation data.
15. Lift station and forcemain shall be verified and dimensioned from street centerlines or lot lines as appropriate. Forcemain depth and location including valves will be provided and tied to permanent above grade features. dimensional and elevation information indicated on the approved plan shall be verified and recorded. This information shall be clearly indicated as being as-built information. Buried potable water lines and electrical service lines shall be clearly dimensioned, located and labeled. Each lift station shall be located by sub-meter GPS with station & offset, northerly & easterly, latitude, longitude and elevation data.
16. Curb cuts or metal tabs, used to mark sewer laterals, water services and water valves, shall bee verified for presence and accuracy of location.
17. Potable and reclaimed water main lines shall be dimensioned off the baseline construction. Water main line material size, length and depth, placed shall be noted. Locations of valves shall also be tied to baseline construction. This information shall be clearly indicated as being as-built information.

Section 01720
AS-BUILTS/RECORD DOCUMENTS
(CONT'D)

18. Potable and reclaimed water valves, tees, bends, all services, and fire hydrants shall be located by tying them to baseline construction (Sta. & Offset). Similarly, force main valves, tees, and bends shall be located in the same manner. Stationing and offset distances shall be measured from upstream manholes to downstream manholes. All services, valves, tees, bends, and hydrants shall be located by sub-meter GPS with station & offset, northerly & easterly, latitude, longitude and elevation data.

19. For perpendicular crossings of storm water, sanitary sewer, potable water, or reclaimed water, the as-built plans shall clearly indicate which utilities are located over or under other utilities, as necessary.

20. Any special features such as, concrete flumes, lake banks, walls, fencing, etc. which are a part of the approved construction drawings should also be located and dimensioned.

21. If an approved subdivision plat or site plan shows a conservation easement, the project surveyor should provide the exact location of the specimen tree(s) from the right-of-way or property lines and proposed easement boundaries on the as-built drawing. The as-built location of these trees will help verify the sufficiency of the conservation easement prior to plat recording or certificate of occupancy.

22. When storm water, potable water, reclaimed water, or sanitary sewer improvements are located within an easement, the as-built drawing will accurately depict the location of the easement itself as well as the exact location of the improvements within the easement. This is required in order to verify that the improvements have been properly located and to ensure that future subsurface excavation to perform remedial repair can be accomplished without disturbance beyond the easement.

23. As-built drawings are to be prepared, signed and sealed by a Florida licensed surveyor. These as-built drawings shall also be signed and sealed by a Florida licensed engineer of record. Two (2) paper copy sets of as-built record drawings shall be provided, a CD with a digital copy in a compatible AutoCAD format, and PDF format.

24. Elevations shall be referenced to NAVD 1988 Data. As-built survey information shall be referenced to at least two Florida State Plane east coordinates NAD 83.

Section 01720
AS-BUILTS/RECORD DOCUMENTS
(CONT'D)

25. Benchmark Datum utilizes monumentation from the North American Vertical Datum of 1929 with elevations adjusted to NGVD 1988 data. Any NAVD 1929 monument with the limits of construction is to be protected.

1.4 SUBMITTALS

A. CONTRACTOR shall submit each month to CITY the Project Activity Summary that shows current construction activities and a copy of notices to agencies including the City regarding road closures; plus a record of events that will be needed in the future.

B. CONTRACTOR shall submit to CITY as required the proposed shut-off schedule, capping, temporary service scheduling, record of notices to customers and proposed roadway closings.

C. CONTRACTOR shall submit copies of published notices.

D. CONTRACTOR shall submit Final as-builts for each utility included in the plans. Send the two paper copies and the AutoCAD files for pre-approval. The final submittal shall include two (2) Paper Copies of Record, a CD with the AutoCAD files, and a set of PDF files (Mylars are no longer required). When the As-Builts are delivered for clearance of water lines (two paper signed and sealed copies), they will be scheduled for chlorination. CITY will not release the drinking water bacteriological laboratory report to Volusia County Health Department until the As-built information meets CITY requirements. CONTRACTOR will have 60 days from the time that the bacteriological samples are collected to submit any correction that needed to be done to the as-built and CD to CITY. If CONTRACTOR goes past the 60 days re-chlorination will be required and pay for the bacteriological laboratory report will be required. The following are minimum detail samples of how the As-built drawing information will need to be presented.

Section 01720
AS-BUILTS/RECORD DOCUMENTS
(CONT'D)

E. There are examples of how to display and label valves, fittings, and pipes on the plans. Include a location arrow going to the identified object:

Valve Example:

20" GATE VALVE
STA. 22+23 (LT.55.0')
LAT. = 29°12'53.009
LONG. = 81°04'03.355"W
N = 1,774,373.4058
E= 634,602.7566
TOP ELEV. = 27.50
FINISH GROUND ELEV. = 30.50

20" DIP WATER MAIN
STA. 22+00 (RT.55.0')
LAT.= 29°12'50.009"N
LONG.= 81°04'26.355"W
N = 1,774,373.4058
E= 634,602.7566
TOP OF PIPE ELEV. = 27.50
FINISH GROUND ELEV. = 30.50

Manhole Example:

Manhole No.25
STA. 22+23 (LT.55.0')
LAT. = 29°12'53.009
LONG. = 81°04'03.355"W
N = 1,774,373.4058
E= 634,602.7566
RIM ELEV. = 27.50
NORTH 15" RCP ELEV. = 8.50
WEST 24" CMP ELEV. =7.50
BOTTOM ELEV. = 9.30

(All Bench Marks used must be shown on the plans) Bench Mark Example:

BM#13
STA. 20+33 (LT. 85.5')
3/4" Iron Rod with Plastic Cap...
N= 1,774,373.4058
E = 634,602.7566
LAT.= 29°04'53.355"W
LONG. = 81°04'53.355"W
ELEV.= 32.55

Section 01720
AS-BUILTS/RECORD DOCUMENTS
(CONT'D)

PART 2- EXECUTION

2.1 General

All drawings shall be prepared to True State Plane Coordinates. CONTRACTOR shall provide all materials, equipment, labor needed to prepare and submit accurate As-Built/Record Drawings.

A. It is acceptable to CITY if the surveyor utilizes an after the fact approach to collecting and verifying the location and depth by vertical PVC pipes placed by the CONTRACTOR as markers for this purpose. The surveyor shall verify to the accuracy defined in Florida Statues the As-built conditions and certify the Record Drawings.

B. CITY shall not be considered the best source of information for valve locations that may have been lost during final grading, the surveyor or CONTRACTOR shall excavate and properly mark all valve boxes and each valve shall have a tag or color coded to define water, sewer, or reuse water valves. The use of temporary PVC pipe markers color coded is acceptable so long as cross references are provided on the Record Drawings to prevent the tops from a water valve being placed on a sewer valve.

C. THE CONTRACTOR SHALL PROVIDE THE UTILITIES DEPARTMENT ENGINEERING DIVISION THE FINAL AS BUILT/RECORD DRAWINGS ON CD AND MYLARS. THE AS BUILT RECORD DRAWINGS SHALL BE PREPARED USING AUTOCAD FORMAT 2010 OR LATER. IN MODEL SPACE THE DRAWING SHALL BE IN FL83-EF (NAD83 FLORIDA STATE PLANES, EAST ZONE, US FOOT) STATE PLANE COORDINATES AND SHALL BE ABLE TO BE INSERTED INTO THE CITY'S OVERALL GIS SYSTEM. THE RECORD DRAWINGS SHALL ALSO BE PRINTED, SIGNED AND SEALED AS ALLOWED BY STATE OF FLORIDA REGULATIONS. A DISCLAIMER MAY BE NOTED IN A TRANSMITTAL LETTER PLUS THE SURVEYOR MAY ADD A SPECIAL NOTICE ON EACH SHEET REGARDING THE LOCATION OF THE TRUE ORIGINAL RECORD DRAWINGS OR PLACE LIMITS ON RESPONSIBILITY SHOULD SOME-ONE IN THE FUTURE NEED TO MODIFY THE DRAWINGS.

D. Identify the source markers for the survey used for Record Drawings.

END OF SECTION